Michigan Commercial Driver License Manual

Secretary of State
Michigan

Table of Contents

Introduction to Michigan's Commercial Driver License Program iii

PART ONE — For all commercial drivers

Section 1: Introduction 1-1
1.1 Commercial Driver License Tests 1-1
1.2 Other CDL Rules 1-2

Section 2: Driving Safely 2-1
2.1 Vehicle Inspection 2-1
2.2 Basic Control of Your Vehicle 2-13
2.3 Shifting Gears 2-15
2.4 Seeing 2-17
2.5 Communicating 2-18
2.6 Controlling Speed 2-20
2.7 Managing Space 2-23
2.8 Driving at Night 2-26
2.9 Driving in Fog 2-27
2.10 Driving in Winter 2-28
2.11 Driving in Very Hot Weather 2-29
2.12 Railroad Crossings 2-31
2.13 Mountain Driving 2-31
2.14 Seeing Hazards 2-33
2.15 Emergencies 2-36
2.16 Skid Control and Recovery 2-39
2.17 Accident Procedures 2-40
2.18 Fires 2-41
2.19 Staying Alert and Fit to Drive 2-42
2.20 Hazardous Materials Rules For All Commercial Drivers 2-45

Section 3: Transporting Cargo Safely 3-1
3.1 Inspecting Cargo 3-1
3.2 Weight & Balance 3-2
3.3 Securing Cargo 3-3
3.4 Other Cargo Needing Special Attention 3-4

PART TWO — For drivers needing specific endorsements or operating vehicles with air brakes

Section 4: Transporting Passengers 4-1
4.1 Pre-trip Inspection 4-1
4.2 Loading and Trip Start 4-2
4.3 On the Road 4-4
4.4 After-trip Vehicle Inspection 4-5
4.5 Prohibited Practices 4-5
4.6 Use of Brake-door Interlocks 4-5

Section 5: Air Brakes 5-1
5.1 The Parts of an Air Brake System 5-1
5.2 Dual Air Brake 5-5
5.3 Inspecting Air Brake Systems 5-5
5.4 Using Air Brakes 5-7

Section 6: Combination Vehicles 6-1
6.1 Driving Combination Vehicles Safely 6-1
6.2 Combination Vehicle Air Brakes 6-4
6.3 Coupling and Uncoupling 6-6
6.4 Inspecting a Combination Vehicle 6-10

Section 7: Doubles and Triples 7-1
7.1 Pulling Double/Triple Trailers 7-1
7.2 Coupling and Uncoupling 7-2
7.3 Inspecting Doubles and Triples 7-4
7.4 Doubles/Triples Air Brake Check 7-5

Section 8: Tank Vehicles 8-1
8.1 Inspecting Tank Vehicles 8-1
8.2 Driving Tank Vehicles 8-1
8.3 Safe Driving Rules 8-3

Section 9: Hazardous Materials 9-1
9.1 The Intent of the Regulations 9-2
9.2 Hazardous Materials Transportation—Who Does What 9-2
9.3 Communication Rules 9-3
9.4 Loading and Unloading 9-11
9.5 Bulk Packaging Marking, Loading & Unloading 9-15
9.6 Hazardous Materials—Driving & Parking Rules 9-16
9.7 Hazardous Materials—Emergencies 9-19

Table A Radioactive Separation Table 9-23
Table B Table of Hazard Class Definitions 9-23
Hazardous Materials Glossary 9-24

PART THREE — For drivers who need to take skills tests

Overview Michigan CDL Skills Tests 10a
Third Party Driver Skills Test Administration 10a-c
Section 10: Vehicle Inspection Test 10-1
10.1 All Vehicles 10-1
10.2 Bus/School Bus/Truck/Tractor 10-4
10.3 Trailer 10-7
10.4 School Bus Only 10-8
10.5 Coach/Transit Bus 10-9

Section 11: Basic Vehicle Control Skills Test 11-1
11.1 Scoring 11-1
11.2 Exercises 11-1

Section 12: On-Road Driving Test 12-1
12.1 How You Will Be Tested 12-1

APPENDICES

Appendix A Commercial Driver License Certification Form A-1
Appendix B Sample Test Questions A-2
Appendix C Vehicle Inspection Memory Aid A-3

Introduction: Michigan's Commercial Driver License Program

This Section Covers

- ✔ Who needs a CDL
- ✔ Eligibility Requirements
- ✔ Medical/Physical Requirements
- ✔ CDL Groups/Endorsements/Exemptions
- ✔ Application Procedures
- ✔ Tests
- ✔ Restrictions
- ✔ Fees
- ✔ Serious Traffic and RRX Violations
- ✔ Drug/Alcohol-Related Violations

Please read this section very carefully to determine if you need a CDL.

This manual includes the information needed to pass the Commercial Driver License (CDL) knowledge and skills test(s).

Although every effort has been made to ensure accuracy of this information, laws and procedures are subject to change. For exact wording of a law or specific guidelines, contact a Secretary of State branch office. All offices have a copy of the *Michigan Vehicle Code* which has traffic laws and regulations. Branch office personnel will also explain procedures related to your questions.

Who Needs a CDL?

Any resident who intends to operate:

- ✔ **VEHICLES:** Having a gross vehicle weight rating (GVWR) of 26,001 pounds or more.
- ✔ **COMBINATION VEHICLES:**
  - Towing a trailer or other vehicles with a GVWR of 10,001 pounds or more with a gross combination weight rating of 26,001 pounds or more.
- ✔ **ANY VEHICLES:**
  - Designed to transport 16 or more people (including the driver)
  - Carrying hazardous materials in amounts requiring placards.

Gross Vehicle Weight Rating (GVWR) is the recommended maximum total weight of the vehicle and load as designated by the vehicle manufacturer. The **GVWR** label is usually found on the driver side door post of the power unit and on or near the front of the trailer. The **GVWR** should not be confused with the elected **GVW** which is declared by the vehicle owner for registration purposes.

Gross Combination Weight Rating (GCWR) means the value specified by the manufacturer as the maximum loaded weight of a combination vehicle. In the absence of a label, the GCWR will be calculated by adding the GVWR of the power unit to the GVWR of the vehicle(s) or trailer(s) being towed.

What Are the Driving Record Eligibility Requirements?

Before you can obtain an original CDL, you must qualify for the license based on your driving record. Any of the following will disqualify you from obtaining a CDL:

- ✔ Inability to make required certifications on the CDL Certification Form (BFS-103). See Appendix A.
- ✔ Having a license from more than one state.
- ✔ A current suspension, revocation, denial, or cancellation of your driving privileges in Michigan or any other jurisdiction. If your driving privileges are currently suspended, revoked denied or cancelled in Michigan or any other state, this must be resolved before you can receive a CDL.
- ✔ Conviction of any six-point violation in the 24 months immediately preceding application.
- ✔ Conviction for operating a commercial motor vehicle while impaired in the 24 months immediately preceding application.
- ✔ A suspension or revocation in the 36 months immediately preceding application.
  - Past (cleared) suspensions for Failure to Appear in Court (FAC), Failure to Comply with a Judgment (FCJ), failure to appear for re-examination, financial responsibility, non-sufficient funds checks, and a suspension or revocation for a temporary medical condition ***do not*** disqualify an applicant for a CDL. Current suspensions for any reason must be cleared before a CDL can be issued.

How Old Must I Be To Obtain a CDL?

You must be age 21 to drive a commercial motor vehicle across state lines (**interstate**). You may drive a commercial motor vehicle in Michigan (**intrastate**) at age 18; except to transport hazardous materials in a quantity that requires the vehicle be marked or placarded, you must be age 21 or older.

What are the Driver Qualification Requirements for the CDL?

Unless exempt, you must comply with the federal commercial driver qualification requirements, **including the medical/physical qualifications** found in the Federal Motor Carrier Safety Regulations, 49 CFR Part 391 — Qualifications of Drivers. This includes drivers who operate commercial vehicles only in Michigan. When applying for your CDL, you will sign a certification form (BFS 103 — see Appendix A) that says you meet these requirements before receiving your CDL. ***Before*** taking any CDL driver skills tests, you must provide a valid Medical Examiner's Certificate (commonly known as a DOT card) or medical waiver to your examiner allowing you to operate your truck or bus. Ask your employer about these medical/physical and other driver qualification requirements.

How Can I Get Additional Information on Medical/Physical Requirements?

For information on:

- ✔ **Intrastate** (in Michigan) medical/physical requirements and state commercial truck and bus rules and regulations, contact: **Michigan Department of State Police, Motor Carrier Division, 4000 Collins Rd., P.O. Box 30632, Lansing, Michigan 48909; 517/336-6195. Internet: www.michigan.gov/msp**
- ✔ **Interstate** (across state lines) medical/physical requirements and the Federal Motor Carrier Safety Regulations for trucks and buses, contact: **Federal Motor Carrier Safety Administration, 315 W. Allegan St., Room 205, Lansing, Michigan 48933; 517/377-1866. Note:** The Lansing FMCSA office does not distribute any forms or sell the FMCSR rulebooks. **Internet: www.fmcsa.dot.gov**
- ✔ **School bus** medical/physical requirements and other school bus regulations, contact: **Michigan Department of Education, Office of School Support Services, P.O. Box 30008, Lansing, Michigan 48909; 517/373-6388. Internet: www.michigan.gov/mde**

What Type of CDL Do I Need?

A Michigan resident needs a CDL with the appropriate group designation to operate the following vehicles:

✔ **GROUP A**:

- Combination vehicles towing trailers or other vehicles with a GVWR of 10,001 pounds or more when the gross combination weight rating (GCWR) is 26,001 pounds or more.

Unless certain restrictions apply, the Group A allows you to operate Group B and Group C vehicles.

✔ **GROUP B:**

- Vehicles with a GVWR of 26,001 pounds or more.
- The Group B allows the towing of trailers or other vehicles with a GVWR of 10,000 pounds or less.

Unless certain restrictions apply, the Group B allows you to operate Group C vehicles.

✔ **GROUP C**:

- Small single vehicles with a GVWR less than 26,001 pounds or small vehicles with a GVWR less than 26,001 pounds towing trailers or other vehicles that:
  - → Are designed to transport 16 or more persons (including the driver).
  - → Carry hazardous materials in amounts requiring placards.

What Endorsements Do I Need?

In addition to the appropriate CDL group designation, endorsements are required for the following:

✔ **T** **DOUBLE or TRIPLE TRAILERS:** (Triple trailer combinations are not permitted in Michigan).

✔ **P** **PASSENGER:** For vehicles which are designed to carry 16 or more people (including the driver).

✔ **N** **TANK:** For vehicles designed to haul liquids or liquefied gases in bulk in permanently mounted cargo tanks rated at 119 gallons or more or portable cargo tanks rated at 1,000 gallons or more.

✔ **H** **HAZARDOUS MATERIALS:** To carry hazardous materials in amounts requiring placards.

✔ **X** An X-endorsement code will appear on the license instead of the H and N codes when an applicant receives both the tank and hazardous materials endorsements.

Are There CDL Exemptions?

These people do ***not*** need a CDL:

✔ **ACTIVE DUTY MILITARY:** Operating military vehicles with military licenses **(includes National Guard**).

✔ **POLICE AND FIREFIGHTERS:** Operating authorized emergency vehicles.

✔ **FARMERS:** Operating vehicles within a 150 mile radius of their farm.

- An F-endorsement is needed by farmers operating combination vehicles whose towing vehicle has a GVWR of 26,001 pounds or more. A knowledge test, but no skills test, is required to obtain the F-endorsement. The F-endorsement is **NOT** a CDL.
- Farmers who carry hazardous materials in amounts requiring placards while operating combination vehicles whose towing vehicle has a GVWR of 26,001 pounds or more, or a single vehicle with a GVWR of 26,001 pounds or more, ***need a CDL with a hazardous materials endorsement.***

✔ **INDIVIDUALS:** Operating motor homes or other vehicles used exclusively to transport personal possessions or family members, for non-business purposes.

How Do I Obtain a CDL?

When ready to apply for your **first** CDL, come to a local Secretary of State branch office to:

- ✔ Show your driver license.
- ✔ ***Show*** proof of Social Security number (Social Security card, payroll check stub, W-2 Form).
- ✔ Fill out the CDL Certification form (BFS-103) which includes a statement certifying that you meet the commercial driver medical qualifications. If you have had any change in your physical condition since your last driver license renewal which may affect your ability to drive, you may need a special form from the branch office for your physician to fill out before you can apply for your license.
- ✔ Meet driver eligibility requirements as determined by branch office personnel. (See page iv.)
- ✔ Pass the required knowledge and vision tests. You must pass all required knowledge tests to obtain a **CDL Temporary Instruction Permit (TIP)**. This allows you to practice driving under supervision of a driver who has a CDL for the type of vehicle you are operating. A CDL TIP is also required for taking the CDL skills tests.
- ✔ Pay your CDL Group Designation and Endorsement fees.
- ✔ Schedule and take your CDL skills test through an approved third party driver skills test organization certified to administer the CDL skills test. These organizations are public and private agencies authorized only by the state to conduct driver skills tests.
- ✔ After passing your CDL skills test, you will:
  - Receive a Michigan Department of State Driver Skills Test Certificate (TPT-010) only from the approved third party driver skills test organization.
  - Take the skills test certificate directly to a SOS branch office to receive your full privilege CDL. Your certificate is **valid for one (1) year** from date of issuance. After one year, you must take all CDL tests again.
  - Pay a correction fee to add the CDL privileges to your license and obtain your temporary CDL.
  - Receive your photo CDL in the mail within about ten (10) business days.

What Tests Do I Need To Take?

All drivers applying for their original (first) commercial driver license must take and pass the appropriate CDL knowledge (written) tests and a skills test.

Drivers with a CDL from another state must always take the H-Hazardous Materials endorsement written test to keep the H-endorsement. Transferring drivers must also pass the appropriate knowledge tests when changing their group designator, removing restrictions or adding endorsements. They may also need to take the CDL skills tests if upgrading their group designator, removing restrictions or adding the passenger (P) endorsement to their CDL.

Knowledge Tests

You will take one or more knowledge tests. The following chart summarizes the type of tests and number of questions you are required to pass depending on the type of vehicle you drive and the type of cargo you haul. ***It is recommended that you study this manual very carefully as it contains the information you need to pass the CDL tests. SEE APPENDIX B FOR SAMPLE TEST QUESTIONS.***

	CDL TESTS	
CDL GROUP	**KNOWLEDGE TESTS**	**SKILLS TEST**
Group A	70 Questions*	Yes
Group B	50 Questions	Yes
Group C	50 Questions	Yes
	* This includes a 20-question combination vehicle test.	
ENDORSEMENTS	**KNOWLEDGE TESTS**	**SKILLS TEST**
T – Double Trailer	20 Questions	No
P – Passenger	20 Questions	Yes
N – Tank Vehicles	20 Questions	No
H – Hazardous Materials	30 Questions	No

AIR BRAKES TEST

If you want to be licensed to drive vehicles with air brakes, you must pass a 25-question air brake knowledge test. The vehicle you use for the skills test must be equipped with air brakes. If either of these conditions have ***not*** been met, you will be restricted from operating vehicles with air brakes.

All CDL knowledge tests are administered in written form. If you have limited reading skills, you may request to take the oral tests which are available on audiocassettes for all the tests except the hazardous materials endorsement test. Anyone applying for the H-Hazardous Materials endorsement must pass a written hazardous materials knowledge test.

CDL Skills Test

You will also need to pass the CDL skills test which includes three parts:

- ✔ A vehicle inspection test to measure your ability to perform a vehicle safety check. A Vehicle Inspection Memory Aid is available on the last page of this manual [Appendix C] and may be used during the test.
- ✔ An off-street basic control skills test.
- ✔ An on-street driving test.

All three parts are conducted during the same testing session, in the order listed above. Each portion must be passed before continuing on to the next. A failure of any segment terminates testing. On subsequent attempts, you must always start with the vehicle inspection regardless of which part you previously failed. You are allowed one (1) attempt per day.

You may contact your local Secretary of State branch office or visit the Department website at **www.michigan.gov/sos** for information about approved third party testing sites in your area.

- ✔ You must supply an empty vehicle with a GVWR representative of the type you plan to drive (including a trailer, if required).
- ✔ The vehicle must be equipped with at least two permanently mounted seats for yourself and the examiner. Safety belts are also required for both the driver and examiner (except for the examiner on buses).
- ✔ Applicants applying for the P-Passenger endorsement must pass the skills test in a vehicle with a seating capacity of 16 or more passengers, including the driver.
- ✔ You must show valid registration and proof of insurance for your test vehicle.
- ✔ You must also be able to furnish the third party organization with your Michigan photo driver license, CDL Temporary Instruction Permit (TIP), and Medical Examiner's Certificate (DOT card, School Bus card) or medical waiver.

See Sections 10, 11 and 12 at the end of this manual for more information about the CDL skills tests and information regarding the third party driver skills testing program.

What CDL Restrictions Could I Receive?

You could receive restrictions on your CDL under the following conditions:

- ✔ ***CODE 28 RESTRICTION — "CDL not valid for operating vehicles equipped with air brakes."***

  If you do not pass the air brake knowledge test, or if the vehicle you use for the CDL skills tests is not equipped with air brakes, you will be restricted from operating vehicles with air brakes.

- ✔ ***CODE 29 RESTRICTION — "CDL-P endorsement valid in Group B or C vehicles only."***

  If you are adding the P-Passenger endorsement to your current Group A designation, you must complete the CDL tests in a bus or school bus. If the bus you use for the P-Passenger endorsement skills tests is a Group B-Bus, your P-Passenger endorsement will be limited to Group B and C vehicles by this restriction.

- ✔ ***CODE 30 RESTRICTION — "CDL-P endorsement valid in Group C vehicles only."***

  If you are adding the P-Passenger endorsement to your current Group A or B designation, you must complete the CDL skills tests in a bus or school bus. If the bus you use for the P-Passenger endorsement skills test is a Group C-Bus, your P-Passenger endorsement will be limited to Group C vehicles by this restriction.

- ✔ ***SEASONAL RESTRICTED CDL***

  A special seasonal restricted CDL is available for agri-business employees operating Group B and C vehicles on routes within 150 miles from the place of business. Buses and school buses cannot be operated with this restricted license. Although CDL knowledge and skills tests are not required, applicants must have held a valid driver license for at least one year and possess a clean driving record for the three-year period preceding application for the seasonal CDL.

  This limited CDL must be applied for each calendar year. Within a one-year period, applicants can choose to have the CDL valid for 180 days from date of issue or valid for the seasonal periods from April 2 through June 30 and September 2 through November 30. The restricted CDL permits the driver to transport the following ***limited*** amounts of hazardous materials without the H or X endorsements.

  - Diesel motor fuel in quantities of 1,000 gallons or less.
  - Liquid fertilizers in quantities of 3,000 gallons or less.
  - Solid fertilizers that are not transported with any organic substance.

What Fees Do I Pay?

You will be charged one of the following:

✔ Base Operator License	$13 or
✔ Base Chauffeur License	$21

PLUS

✔ CDL Group Designation	$20
✔ CDL Endorsements (each, if needed)	$ 5 ($10 for “X”)
✔ A Correction Fee May Also Apply	$7 or $13

CDL Skills Tests

- ✔ Third party driver skills test fees and refund policies vary. Be sure to discuss and understand your test fees and scheduling requirements with the third party organization that you have selected before taking your test.

Adding CDL Privileges

- ✔ Adding CDL privileges, including adding a passenger endorsement, removing a restriction, and changing a lower group designation to a higher group designation, requires new skills tests in the appropriate vehicle. These are considered new CDLs and are charged accordingly, along with a correction fee.

What About Serious Traffic Violations While Driving a CMV?

If you are convicted of certain traffic violations while operating a commercial motor vehicle (CMV), you are subject to stiffer penalties which may result in the suspension or revocation of your CDL. Your operator/chauffeur license may also be affected, depending on the severity of the violation.

Any traffic violation in a non-commercial motor vehicle resulting in a suspension or revocation of your operator/chauffeur license will also result in a suspension or revocation of your CDL.

The following information outlines the various conviction penalties for certain serious traffic violations, railroad crossing violations and drug or alcohol-related offenses committed while operating a CMV.

Serious Traffic Violations

- ✔ A traffic violation connected with a fatal accident.
- ✔ Speeding 15 mph or more over the posted limit.
- ✔ Following too closely.
- ✔ Careless driving.
- ✔ Changing/using lanes erratically/improperly.

If charged and convicted for any of the five serious traffic violations listed above, your ***CDL*** will be:

- Suspended for 60 days for two violations in separate incidents in three years.
- Suspended for 120 days for three or more violations in separate incidents in three years.

Additionally, points will be added to your driving record.

Railroad Crossing Violations

For drivers who are not required to always stop:

- ✔ Failure to slow down and check the tracks are clear of an approaching train.
- ✔ Failure to stop before reaching the crossing when the tracks are not clear.

For drivers who are always required to stop:

- ✔ Failing to stop before driving onto the crossing.

For all drivers:

- ✔ Failing to have sufficient space to drive completely through the crossing without stopping.
- ✔ Failing to obey a traffic control device or the directions of an enforcement official at the crossing.
- ✔ Failing to negotiate a crossing because of insufficient undercarriage clearance.

If charged and convicted for any of the railroad crossing violations listed above, your ***CDL*** will be:

- Suspended for 60 days for the first violation.
- Suspended for 120 days for two violations in separate incidents in three years.
- Suspended for one year for three or more violations in separate incidents in three years.

Additionally, points will be added to your driving record.

Other Serious Violations

- ✔ Operating under the influence of a controlled substance.
- ✔ Leaving the scene of a CMV accident.
- ✔ Committing a felony using a CMV.
- ✔ Manslaughter.
- ✔ Fleeing/eluding a law enforcement officer (felony).

If charged and convicted for any of the five the serious violations listed above your ***CDL*** will be:

- Suspended for one year for a first violation; three years, if transporting hazardous materials.
- Revoked for a minimum of ten years for any two violations occurring in separate incidents, or any one of them a second time in any time period.

If charged with and convicted of reckless driving, negligent homicide, or fleeing/eluding a law enforcement officer (misdemeanor), your ***CDL*** will be suspended for one year.

If charged with and convicted of committing a felony involving the manufacture or distribution of a controlled substance, your ***CDL*** will be revoked for life.

Your ***operator/chauffeur*** license may also be suspended or revoked and points will be added to your driving record.

What About Serious Alcohol Violations While Operating a CMV?

Out-of-service

You will be placed out-of-service for 24 hours if you:

- ✔ Refuse to take a preliminary breath test (PBT);
- ✔ Consume alcohol within four hours prior to operating a CMV;
- ✔ Consume alcohol while operating a CMV; or
- ✔ Have a bodily alcohol content (BAC) of .015 grams or more per 100 milliliters of blood, per 210 liters of breath, or per 67 milliliters of urine.

Other Alcohol Violations

If you have consumed too much alcohol, you can be charged with:

- ✔ Operating with an unlawful bodily alcohol level (UBAL) of .10 grams or more per 100 milliliters of blood, per 210 liters of breath, or per 67 milliliters of urine.
- ✔ Operating under the influence of liquor (OUIL).
- ✔ Operating while impaired (OWI) when your BAC is more than .07 but less than .10 grams per 100 milliliters of blood, per 210 liters of breath, or per 67 milliliters of urine.
- ✔ Operating with a BAC of .04 – .07 grams per 100 milliliters of blood, per 210 liters of breath, or per 67 milliliters of urine.
- ✔ OUIL, OWI or UBAL causing death or serious injury.

You may be charged with operating under the influence of drugs (OUID).

If you refuse to submit to a chemical test (implied Consent)* or are convicted of any of the alcohol offenses listed above, your ***CDL*** will be:

- ✔ Suspended for one year for a first offense, or three years if transporting hazardous materials; and
- ✔ Revoked for a minimum of ten years for a second or third offense.

Note: *Implied Consent means that any person who holds a CDL is considered to have agreed to such testing. Consent is implied by driving a motor vehicle.

Your ***operator/chauffeur*** license may also be suspended or revoked and points may be added to your driving record.

What are the CDL Consequences for Violations Committed While Operating Non-Commercial Vehicles?

Your CDL is a special privilege attached to your operator or chauffeur license. If, while operating ***any*** kind of motor vehicle, including your personal vehicle, you commit a violation that results in the suspension or revocation of your operator or chauffeur license, your CDL will be suspended for the same period.

The length of the suspension and revocation varies from 90 days to two years depending on the violation and number of prior offenses. Among these types of convictions are:

- ✔ Refusal to submit to a chemical test (Michigan's Implied Consent law).
- ✔ Operating with an unlawful bodily alcohol level (UBAL).
- ✔ Operating under the influence of liquor (OUIL).
- ✔ Operating under the influence of drugs (OUID).
- ✔ Operating while impaired (OWI) by alcohol and/or other drugs.
- ✔ Operating with any bodily alcohol content, if driver is less than 21 years old.

(Please refer to the *Michigan Vehicle Code* for complete information.)

Points will be added to your driving record for these and other violations, regardless of the type of vehicle your operate. If your driving record accumulates 12 or more points within a two-year period, your operator or chauffeur license, along with your CDL, can also be suspended or even revoked.

What are the CMV Operator's Responsibilities Regarding Notification of Convictions and Suspensions?

You must notify your employer in writing of:

- ✔ Traffic violations (other than a parking ticket) committed in ***any*** motor vehicle within 30 days of conviction. The notification must include:
  - Your full name and signature.
  - Driver license number.
  - Date of conviction.
  - Specific violation(s) committed.
  - Whether the violation was in a CMV.
  - The location of the violation.

You should also notify your employer in writing of:

- ✔ Any driver license suspension, revocation, cancellation, lost privilege or disqualification by the end of the business day following the day you receive notice of the action.
- ✔ Any out-of-service order within twenty-four hours.

How Do I Renew My CDL?

Can I Renew My CDL By Mail?

Everyone who needs a CDL must come to a Secretary of State branch office to apply for an original CDL or to renew a CDL. Your CDL must be renewed every four years with your base operator or chauffeur license.

At the branch office, you will take a vision test and your driving history will be checked electronically through state and national computer records. If your driving privileges are currently suspended, revoked, canceled or denied for any reason in Michigan or another state, you cannot renew your CDL until your license privileges are restored. The record check must be completed by the branch office before your CDL can be issued.

What Tests Do I Need to Take to Renew My CDL?

All Michigan drivers renewing their driver licenses must take a 15-question driver license renewal test. This is not a CDL test, but you will be required to take this test to renew your operator or chauffeur license. Unless you have a hazardous materials endorsement, no other tests will be required to renew your CDL.

If you currently have a hazardous materials endorsement on your CDL (H or X), you will be required to take the hazardous materials endorsement test again, and pass it with a score of 80% or higher, to renew the endorsement. The hazardous materials endorsement test is a written knowledge test consisting of 30 multiple-choice questions. An oral test for this endorsement is not permitted. All information needed to pass this test is in this manual.

Unless you are adding CDL privileges, no other CDL knowledge or skills tests will be required to renew your CDL or any other endorsements.

What Happens If I Fail the Hazardous Materials Endorsement Test?

You may continue using your CDL and hazardous materials endorsement until your driver license expires (your birthday). If you fail to pass the hazardous materials endorsement test, you may take it again as often as you wish to try to pass it. If your driver license has not expired, you will be encouraged to delay its renewal for as long as possible while trying to pass the hazardous materials endorsement exam.

However, if your CDL is about to expire, you may want to renew it ***without*** the hazardous materials endorsement. This will allow you to continue to operate private and commercial motor vehicles. However, without a hazardous materials endorsement you will not be allowed to transport hazardous materials that require placards. If you pass the hazardous materials test after you have renewed your license, you may add the hazardous materials endorsement to your CDL by paying a $7.00 correction fee plus the $5.00 endorsement fee.

What Else Do I Need to Know?

Do I Need a Chauffeur License?

A chauffeur base license is required when a person is:

- ✔ Employed for the principal purpose of operating a motor vehicle or combination of vehicles with a GVWR or GCWR or GVW or GCW of 10,000 pounds or more.
- ✔ Operating a motor vehicle as a carrier of passengers or as a common or contract carrier of property.
- ✔ Operating a bus, school bus, taxi or limousine.
- ✔ Drivers operating vehicles singly or in combination with a GVW, GVWR, GCW or GCWR of 10,000 pounds or more must meet the commercial driver medical requirements (including possession of the appropriate medical card or medical waiver).

If required, the CDL group designator and CDL endorsements are added to the chauffeur base license.

What is Required to Convert My Out-of-State CDL to a Michigan CDL?

When moving to Michigan from another state, you must apply for a Michigan CDL to operate commercial vehicles. To obtain a Michigan CDL, you must visit a Secretary of State branch office and:

- ✔ Surrender your out-of-state CDL.
- ✔ Complete a computer check of your eligibility status through national and state records. If your driving privilege is suspended, revoked, denied or cancelled for any reason in any other state, you cannot receive your Michigan CDL until the out-of-state licensing issue(s) are resolved. The driving record check must be completed by the branch office before your CDL can be issued.
- ✔ Pass the vision test.
- ✔ Take and pass the appropriate Michigan CDL written tests if you are upgrading your group designator, adding endorsements or removing an air brake restriction. To keep your H-Hazardous Materials endorsement, you must always take and pass the Hazmat written test. Otherwise, written tests are not required if you are not upgrading your CDL.
- ✔ Take and pass the Michigan CDL skills test if you are upgrading your group designator, adding the P-Passenger endorsement or removing a CDL limitation such as the air brake restriction. If a CDL skills test is required, you must wait until you receive your photo Michigan base license (operator or chauffeur) to take the test. Your Michigan photo driver license must be presented to the third party driver skills test organization before your CDL skills test can be administered. Generally, your regular driver license (operator or chauffeur) will be mailed to you within ten (10) days.
- ✔ Receive your Michigan CDL upon proper and successful completion of any necessary CDL tests and payment of fees.

Do “Incidental” Drivers Need a CDL?

Unless exempt, any driver who operates a commercial motor vehicle on roads or highways that are accessible to the public, must have a CDL regardless of the distance driven or amount of driving time.

Where Do I Get Additional Information?

The following organizations can provide information regarding commercial driver licensing, commercial driver qualification requirements and the operation of commercial motor vehicles in Michigan:

Michigan Department of State
Special Assistance Unit
Lansing, MI 48918
(517) 322-1166
www.michigan.gov/sos

Michigan Trucking Association
1131 Centennial Way
Lansing, MI 48917
(517) 321-1951
www.mitrucking.org

MICHIGAN CDL GUIDE

The following chart is designed to help you determine the type of CDL you need. It also includes information about the knowledge and skills test required for each class of commercial vehicle.

MICHIGAN CDL GUIDE

GROUPS – VEHICLE DESCRIPTIONS		TYPICAL VEHICLES IN GROUP	KNOWLEDGE TESTS REQUIRED	SECTIONS OF CDL MANUAL TO STUDY	SKILLS TESTS REQUIRED	POSSIBLE RESTRICTIONS
GROUP A	• Combination vehicles: With a GCWR of 26,001 lbs. or more when towing trailers or other vehicles with a GVWR of 10,001lbs. or more		• General Knowledge • Combination Vehicles • Air Brake (if equipped)	• 1, 2, 3 • 5 • 6 • 10, 11, 12 • Appendices	• Vehicle Inspection • Basic Control Skills • Driving	• CDL not valid for vehicle with air brakes. (Code 28) • CDL P endorsement valid in Group B and C vehicle, only. (Code 29) • CDL P endorsement valid in Group C vehicle only. (Code 30)
GROUP B	• Single power unit having a GVWR of 26,001 lbs. or more. • Group B allows for towing trailers or other vehicles with a GVWR of 10,000 lbs. or less.		• General Knowledge • Air Brakes (if equipped)	• 1, 2, 3 • 5 • 10, 11, 12 • Appendices	• Vehicle Inspection • Basic Controls Skills • Driving	• CDL not valid for vehicle with air brakes. (Code 28) • CDL P endorsement valid in Group C vehicle only (Code 30)
GROUP C	• Small vehicles designed to carry 16 or more people including the driver • Small vehicles hauling hazardous materials requiring placards.		• General Knowledge • Air Brake (if equipped)	• 1, 2, 3, 4 • 5 • 10, 11, 12 • Appendices	• Vehicle Inspection • Basic Controls Skills • Driving	• CDL not valid with air brakes (Code 28)
ENDORSEMENTS - VEHICLE DESCRIPTIONS						
T	Double or Triple Trailers: (Triple trailers are not permitted in Michigan.)		• Doubles	• 6, 7	None	None
P	Passenger: For vehicles designed to carry 16 or more passengers (including the driver)		• Passenger Transport	• 4 • 10, 11, 12 • Appendices	• Vehicle Inspection • Basic Controls Skills • Driving	• CDL P endorsement valid in Group B and C vehicle, only. (Code 29) • CDL P endorsement valid in Group C vehicle only. (Code 30)
N	Tank vehicles: To haul liquids or liquefied gases in bulk in permanently mounted cargo tanks rated at 119 gallons or more or portable cargo tanks rated at 1,000 gallons or more. *		• Tank Vehicle	• 8	None	None
H	Hazardous Materials: To carry hazardous materials in amounts requiring placarding. *		• Hazardous Materials	• 9	None	None

* = An "X" will appear on the license when an applicant receives both the N-Tank and H-Hazardous Materials endorsements.

10/01/2002

Section 1: Introduction
For all commercial drivers

This Section Covers

- ✔ Commercial Driver License Tests
- ✔ Other Safety Rules

There is a federal requirement that each state have minimum standards for the licensing of commercial drivers. This manual provides driver license testing information for drivers who wish to have a commercial driver license (CDL). This manual does NOT provide information on all the federal and state requirements needed before you can drive a commercial motor vehicle (CMV). You may have to contact your state driver licensing authority for additional information.

According to Federal regulations, you must have a CDL to operate:

- ✔ A vehicle with a gross vehicle weight rating (GVWR) of 26,001 pounds or more.
- ✔ A trailer with a GVWR of 10,001 pounds or more if the gross combination weight rating (GCWR) is 26,001 pounds or more.
- ✔ A vehicle designed to transport 16 or more persons (including the driver).
- ✔ Any size vehicle which requires hazardous materials placards.

To get a CDL, you must pass knowledge and skills tests. This manual will help you pass the tests.

1.1 Commercial Driver License Tests

Knowledge Tests

You will have to take one or more knowledge tests, depending on what class of license and what endorsements you need. The CDL knowledge tests include:

- ✔ The general knowledge test, taken by all applicants.
- ✔ The passenger transport test, taken by all bus driver applicants.
- ✔ The air brakes test, which you must take if your vehicle has air brakes.
- ✔ The combination vehicles test, which is required if you want to drive combination vehicles.
- ✔ The hazardous materials test, required if you want to haul hazardous materials or waste in amounts which require placarding.
- ✔ The tanker test, required if you want to haul liquids in bulk.
- ✔ The doubles/triples test, required if you want to pull double or triple trailers.

Skills Test

If you pass the required knowledge test(s), you can take the CDL skills tests. There are three types of general skills that will be tested: vehicle inspection, basic vehicle control, and on-road driving. You must take these tests in the type of vehicle for which you wish to be licensed.

Vehicle Inspection: You will be tested to see if you know whether your vehicle is safe to drive. You will be asked to do an inspection of your vehicle and explain to the examiner what you would check and why. Section 10 of this manual tells what components to inspect and how to inspect them.

Basic Vehicle Control: You will be tested on your skill to control the vehicle. You will be asked to move your vehicle forward, backward, and turn it within a defined area. These areas will be marked with boundary lines and cones. The examiner will tell you how each control test is to be done. Section 11 of this manual explains more about this test.

On-road Test: You will be tested on your skill to safely drive your vehicle in a variety of traffic situations. The situations will include left and right turns, intersections, railway crossings, curves, up and down grades, single or multi-lane roads, streets, and highways. The examiner will tell you where to drive. Section 12 of this manual explains more about this test.

1.2 Other CDL Rules

There are other federal and state rules which affect drivers operating CMVs in all states.

- ✔ You cannot have more than one license. If you break this rule, a court may fine you up to $5,000 or put you in jail. Keep your home state license and return any others.
- ✔ You must notify your employer within 30 days of conviction for any traffic violations (except parking). This is true no matter what type of vehicle you were driving.
- ✔ You must notify your motor vehicle licensing agency within 30 days if you are convicted in any other jurisdiction of any traffic violation (except parking). This is true no matter what type of vehicle you were driving.
- ✔ You must notify your employer immediately if your license is suspended, revoked, or canceled, or if you are disqualified from driving.
- ✔ You must give your employer information on all driving jobs you have held for the past 10 years. You must do this when you apply for a commercial driving job.
- ✔ No one can drive a commercial motor vehicle without a CDL. A court may fine you up to $5,000 or put you in jail for breaking this rule.
- ✔ Your employer may not let you drive a commercial motor vehicle if you have more than one license or if your CDL is suspended or revoked. A court may fine the employer up to $5,000 or put him/her in jail for breaking this rule.
- ✔ All states are connected to one computerized system to share information about CDL drivers. The states will check on drivers' accident records and be sure that drivers don't get more than one CDL.
- ✔ You cannot renew, upgrade or correct your CDL if your driving privileges are suspended, revoked, canceled or denied in any state.
- ✔ You will lose your CDL for at least one year for a first offense:
  - If you drive a CMV under the influence of alcohol or a controlled substance (for example, illegal drugs).
  - If you leave the scene of an accident involving a CMV you were driving.
  - If you use a CMV to commit a felony.

  If the offense occurs while you are operating a CMV that is placarded for hazardous materials, you will lose your CDL for at least three years. You will lose your CDL for life for a second offense. You will also lose your CDL for life if you use a CMV to commit a felony involving controlled substances.

Section 2: Driving Safely
For all commercial drivers

This Section Covers

- ✓ Vehicle Inspection
- ✓ Vehicle Control
- ✓ Shifting Gears
- ✓ Seeing
- ✓ Communicating
- ✓ Speed & Space Management
- ✓ Night Driving
- ✓ Winter Driving
- ✓ Mountain Driving
- ✓ Emergencies
- ✓ Staying Alert

This section contains the general knowledge and safe driving information that ***all*** commercial drivers should know. You must pass a general knowledge test on this information to get a CDL.

This section does ***NOT*** have specific information on air brakes, combination vehicles, doubles, or passenger vehicles. You must read other sections of this manual to learn about them.

This section does have basic information on hazardous materials (HazMat) that all drivers should know. If you need a HazMat endorsement, you should study Section 9.

2.1 Vehicle Inspection

Why Inspect?

Safety for yourself and for other road users is the most important reason you inspect your vehicle.

A vehicle defect found during an inspection could save you problems later. You could have a breakdown on the road that will cost time and dollars, or even worse, a crash caused by the defect.

Federal and state laws require that drivers inspect their vehicles. Federal and state inspectors also may inspect your vehicles. If they judge the vehicle to be unsafe, they will put it “out of service” until it is fixed.

Types of Vehicle Inspection

Pre-trip Inspection. A pre-trip inspection will help you find problems that could cause a crash or breakdown.

During a Trip. For safety you should:

- ✓ Watch gauges for signs of trouble.
- ✓ Use your senses to check for problems (look, listen, smell, feel).
- ✓ Check critical items when you stop:
  - Tires, wheels and rims.
  - Brakes.
  - Lights and reflectors.
  - Brake and electrical connections to trailer.

- Trailer coupling devices.
- Cargo securement devices.

After-trip Inspection and Report. You should do an after-trip inspection at the end of the trip, day, or tour of duty on each vehicle you operate. It may include filling out a vehicle condition report listing any problems you find. The inspection report helps the motor carrier know when the vehicle needs repairs.

What to Look For

Tire Problems.

✓ Too much or too little air pressure.

✓ Bad wear. You need at least 4/32 inch tread depth in every major groove on front tires. You need 2/32 inch tread depth on other tires. No fabric should show through the tread or sidewall.

✓ Cuts or other damage.

✓ Tread separation.

✓ Dual tires that come in contact with each other or with parts of the vehicle.

✓ Mismatched sizes.

✓ Radial and bias-ply tires used together.

✓ Cut or cracked valve stems.

✓ Regrooved, recapped, or retreaded tires on the front wheels of a bus. These are prohibited.

Wheel and Rim Problems.

✓ Damaged rims.

✓ Rust around wheel nuts may mean the nuts are loose — check tightness. After a tire has been changed, stop a short while later and re-check tightness of nuts.

✓ Missing clamps, spacers, studs, or lugs mean danger.

✓ Mismatched, bent, or cracked lock rings are dangerous.

✓ Wheels or rims that have had welding repairs are not safe.

Bad Brakes Drums or Shoes.

✓ Cracked drums.

✓ Shoes or pads with oil, grease, or brake fluid on them.

✓ Shoes worn dangerously thin, missing, or broken.

Steering System Defects (See Figure 2-1)

✓ Missing nuts, bolts, cotter keys, or other parts.

✓ Bent, loose, or broken parts, such as steering column, steering gear box, or tie rods.

✓ If power steering equipped — hoses, pumps, and fluid level; check for leaks.

✓ Steering wheel play of more than 10 degrees (approximately two inches movement at the rim of a 20-inch steering wheel) can make it hard to steer.

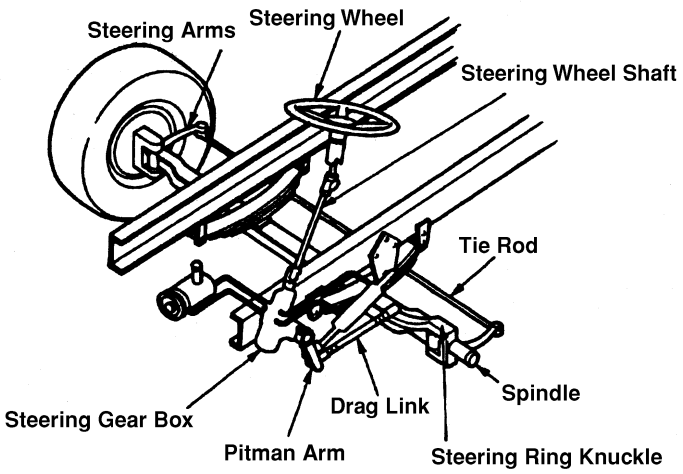

Figure 2-1

Examples of Steering System Key Parts

Suspension System Defects. The suspension system holds up the vehicle and its load. It keeps the axles in place. Therefore, broken suspension parts can be extremely dangerous. Look for:

- ✓ Spring hangers (Figure 2-2) that allow movement of the axle from its proper position.
- ✓ Cracked or broken spring hangers.
- ✓ Missing or broken leaves in any leaf spring. If any leaf or portion of any leaf in any spring assembly is missing or separated, it will put the vehicle "out of service" but any defect could be dangerous (Figure 2-3).
- ✓ Broken leaves in a multi-leaf spring or leaves that have shifted so they might hit a tire or other part.
- ✓ Leaking shock absorbers (Figure 2-4).
- ✓ Torque rod or arm, u-bolts, spring hangers, or other axle positioning parts that are cracked, damaged, or missing (Figure 2-2).
- ✓ Air suspension systems that are damaged and/or leaking (Figure 2-4).
- ✓ Any loose, cracked, broken, or missing frame members.

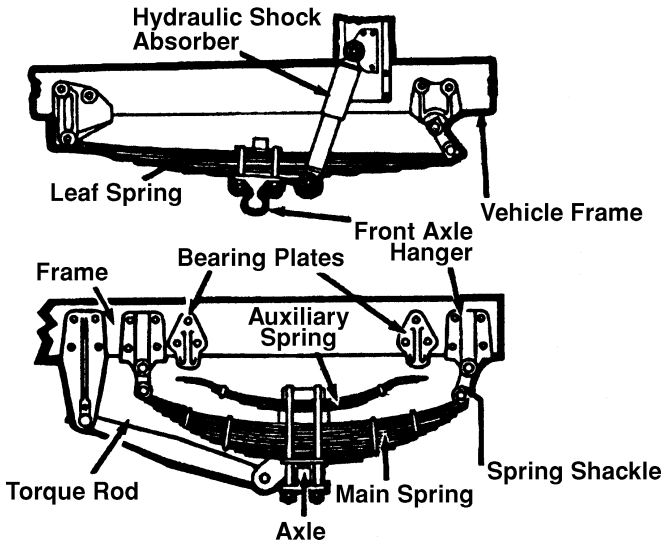

Figure 2-2

Key Suspension Parts

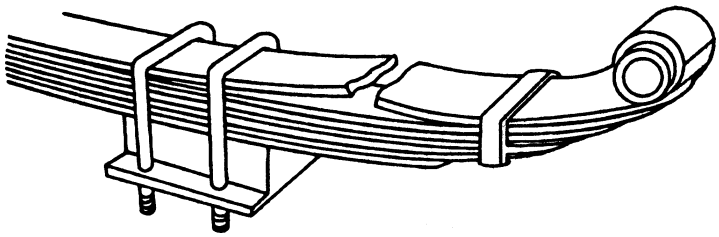

Figure 2-3

Safety Defect: Broken Leaf in Leaf Spring

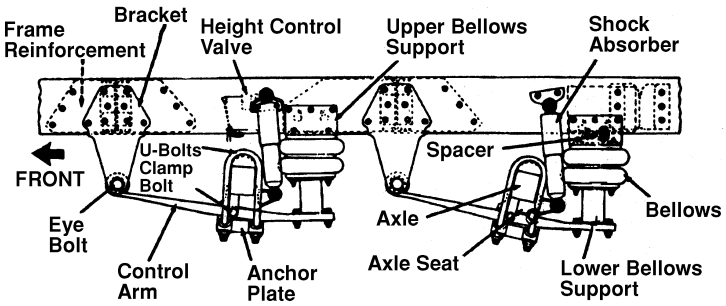

Figure 2-4

Air Suspension Parts

Exhaust System Defects. A broken exhaust system can let poison fumes into the cab or sleeper berth. Look for:

- ✓ Loose, broken, or missing exhaust pipes, mufflers, tailpipes, or vertical stacks.
- ✓ Loose, broken, or missing mounting brackets, clamps, bolts, or nuts.
- ✓ Exhaust system parts rubbing against fuel system parts, tires, or other moving parts of vehicle.
- ✓ Exhaust system parts that are leaking, showing rust holes or dark soot marks.

Emergency Equipment. Vehicle must be equipped with emergency equipment. Look for:

- ✓ Fire extinguisher(s).
- ✓ Spare electrical fuses (unless equipped with circuit breakers).
- ✓ Warning devices for parked vehicles (for example, three reflective warning triangles).

Cargo (Trucks). You must make sure the truck is not overloaded and the cargo is balanced and secured before each trip. If the cargo contains hazardous materials, you must inspect for proper papers and placarding.

CDL Pre-trip Vehicle Inspection Test

In order to obtain a CDL you will be required to pass a pre-trip vehicle inspection test. You will be tested to see if you know whether your vehicle is safe to drive. You will be asked to do a pre-trip inspection of your vehicle and explain to the examiner what you would inspect and why. **Section 10** of this manual tells you what components to inspect and how to inspect them.

A Seven-step Inspection Method

Method of Inspection. You should do a pre-trip inspection the same way each time so you will learn all the steps and be less likely to forget something. The following seven-step method should be useful. Guides are shown in Figures 2-5, 2-6, and 2-7.

Approaching the Vehicle. Notice general condition. Look for damage or vehicle leaning to one side. Look under the vehicle for fresh oil, coolant, grease, or fuel leaks. Check the area around the vehicle for hazards to vehicle movement (people, other vehicles, objects, low hanging wires, limbs, etc.)

1: Vehicle Overview

Review Last Vehicle Inspection Report. Drivers may have to make a vehicle inspection report in writing each day. The motor carrier must repair any items in the report that affect safety and certify on the report that repairs were made or were unnecessary. You must sign the report only if defects were noted and certified to be repaired or not needed to be repaired.

2: Check Engine Compartment

Check That the Parking Brakes Are On and/or Wheels Are Chocked. You may have to raise the hood, tilt the cab (secure loose things so they don't fall and break something), or open the engine compartment door. Check the following:

- ✓ Engine oil level.
- ✓ Coolant level in radiator; condition of hoses.
- ✓ Power steering fluid level; hose condition (if so equipped).
- ✓ Windshield washer fluid level.
- ✓ Battery fluid level, connections, and tie downs (battery may be located elsewhere).
- ✓ Automatic transmission fluid level (may require engine to be running).
- ✓ Check belts for tightness and excessive wear (alternator, water pump, air compressor) — learn how much "give" the belts should have when adjusted right, and check each one.
- ✓ Leaks in the engine compartment (fuel, coolant, oil, power steering fluid, hydraulic fluid, battery fluid).
- ✓ Cracked, worn electrical wiring insulation.

Lower and secure hood, cab, or engine compartment door.

3: Start Engine and Inspect Inside the Cab

Get in and Start Engine.

- ✓ Make sure parking brake is on.
- ✓ Put gearshift in neutral (or "park" if automatic).
- ✓ Start engine; listen for unusual noises.

Test Your Knowledge

1. What is the most important reason for doing a vehicle inspection?
2. What things should you check during a trip?
3. Name some key steering system parts.
4. Name some suspension system defects.
5. What three kinds of emergency equipment must you have?
6. What is the minimum tread depth for front tires?
7. For other tires?

These questions may be on the test. If you can't answer them all, re-read the last four pages.

Vehicle Inspection Guide
(Key Locations to Inspect)

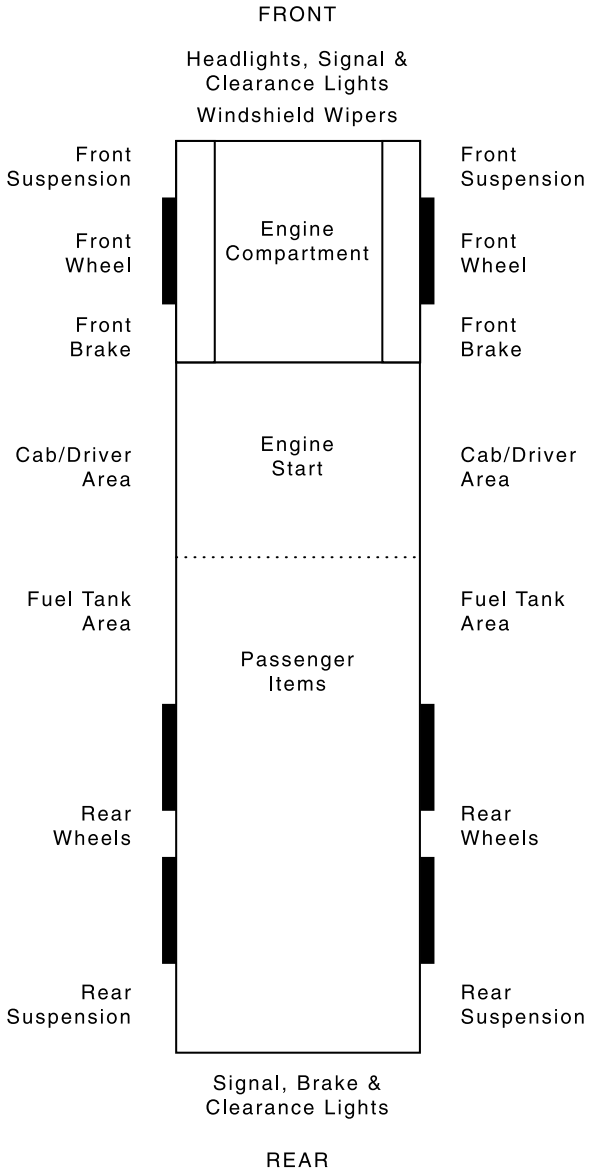

Figure 2.5. Straight Truck/ School Bus

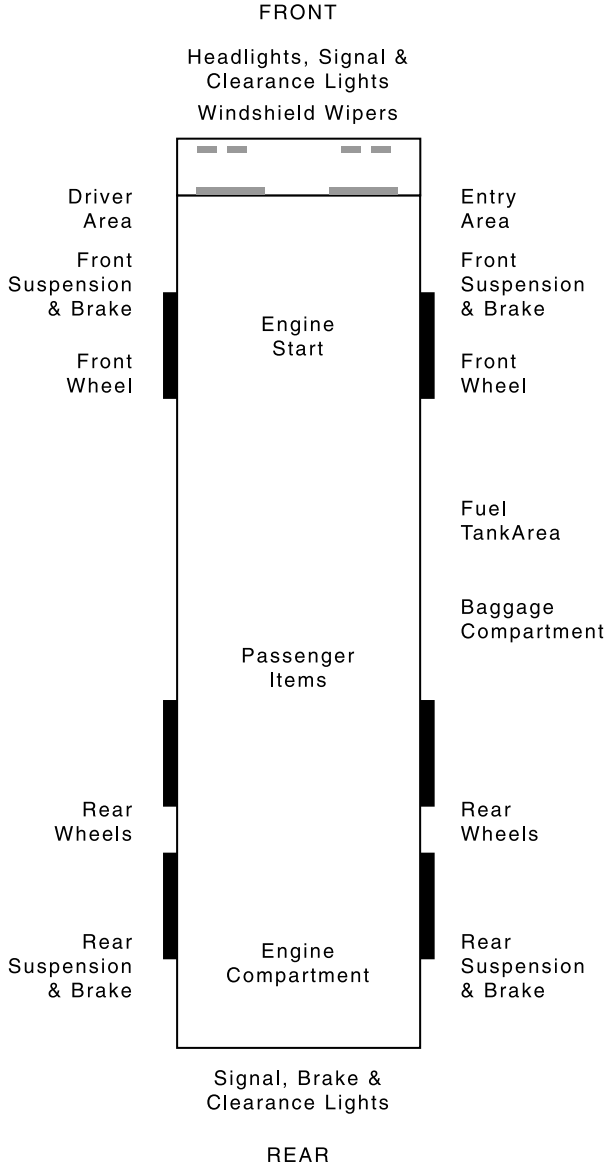

Figure 2.6. Coach/Transit Bus

Safety Note: Always put vehicle key in your pocket — or someone might move the vehicle while you are checking underneath it.

Vehicle Inspection Guide
(Key Locations to Inspect)

FRONT OF VEHICLE

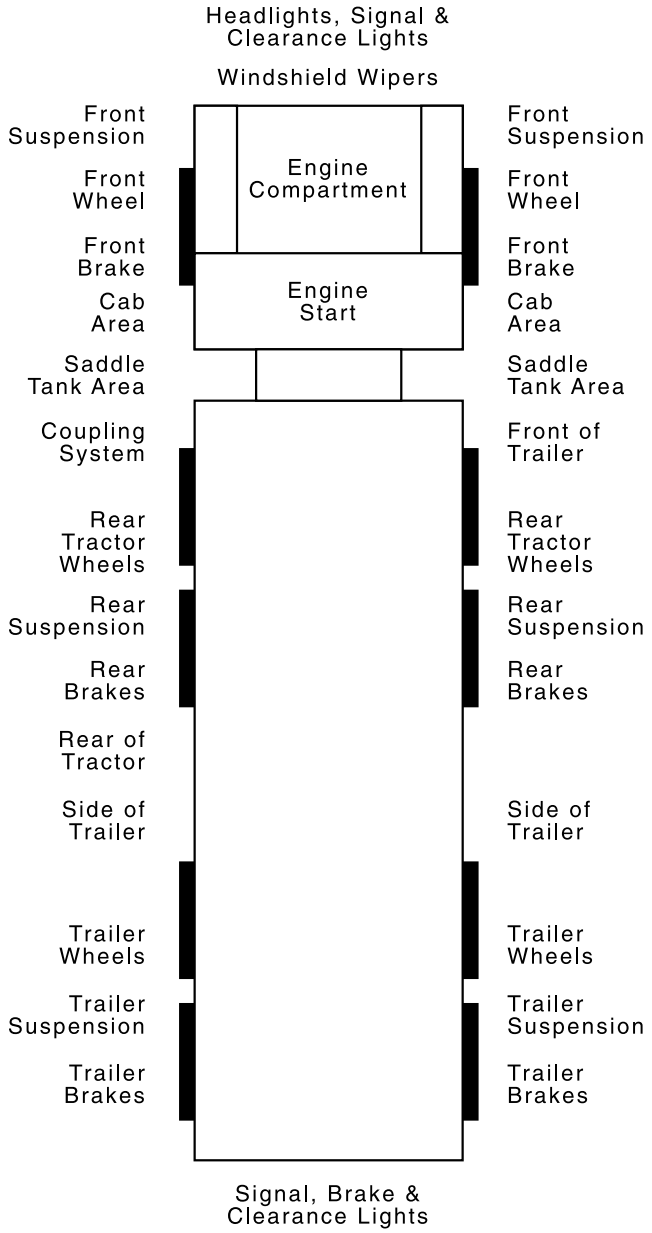

REAR OF TRAILER

Figure 2.7. Tractor/Trailer

Safety Note: If you are parked on a street, walk around so you are facing the oncoming traffic. Pay attention so you don't get run over.

Look at the Gauges.

✓ *Oil pressure.* Should come up to normal within seconds after engine is started.

✓ *Ammeter and/or voltmeter.* Should be in normal range(s).

✓ *Coolant temperature.* Should begin gradual rise to normal operating range.

✓ *Engine oil temperature.* Should begin gradual rise to normal operating range.

✓ *Warning lights and buzzers.* Oil, coolant, charging circuit warning lights should go out right away.

Check Condition of Controls. Check all of the following for looseness, sticking, damage, or improper setting:

✓ Steering wheel.

✓ Clutch.

✓ Accelerator ("gas pedal").

✓ Brake controls.
- Foot brake.
- Trailer brake (if vehicle has one).
- Parking brake.
- Retarder controls (if vehicle has them).

✓ Transmission controls.

✓ Interaxle differential lock (if vehicle has one).

✓ Horn(s).

✓ Windshield wiper/washer.

✓ Lights.
- Headlights.
- Dimmer switch.
- Turn signal.
- Four-way flashers.
- Clearance, identification, marker light switch(es).

Check Mirrors and Windshield. Inspect mirrors and windshield for cracks, dirt, illegal stickers, or other obstructions to seeing. Clean and adjust as necessary.

Check Emergency Equipment.

✓ Check for safety equipment:
- Spare electrical fuses (unless vehicle has circuit breakers).
- Three red reflective triangles.
- Correctly charged and rated fire extinguisher that is properly secured.

✓ Check for optional items such as:
- Tire chains (where winter conditions require them).
- Tire changing equipment.
- List of emergency phone numbers.
- Accident reporting kit (packet).

4: Turn Off Engine and Check Lights

Make sure the parking brake is set, turn off the engine, and take the key with you. Turn on headlights (low beams) and four-way flashers, and get out.

5: Do Walk-around Inspection

✓ Go to front of vehicle and check that low beams are on and both of the four-way flashers are working.

✓ Push dimmer switch and check that high beams work.

✓ Turn off headlights and four-way hazard warning flashers.

✓ Turn on parking, clearance, side-marker, and identification lights.

✓ Turn on right turn signal, and start walk-around inspection.

General

✓ Walk around and inspect.

✓ Clean all lights, reflectors and glass as you go along.

Left Front Side

✓ Driver's door glass should be clean.

✓ Door latches or locks should work properly.

✓ Left front wheel.
- Condition of wheel and rim — missing, bent, broken studs, clamps, lugs, any signs of misalignment.
- Condition of tires — properly inflated, valve stem and cap OK, no serious cuts, bulges, tread wear.
- Use wrench to test rust-streaked lug nuts, indicating looseness.
- Hub oil level OK, no leaks.

✓ Left front suspension.
- Condition of spring, spring hangers, shackles, u-bolts.
- Shock absorber condition.

✓ Left front brake.
- Condition of brake drum.
- Condition of hoses.

Front

✓ Condition of front axle.

✓ Condition of steering system.
- No loose, worn, bent, damaged or missing parts.
- Must grab steering mechanism to test for looseness.

✓ Condition of windshield.
- Check for damage and clean if dirty.
- Check windshield wiper arms for proper spring tension.
- Check wiper blades for damage, "stiff" rubber, and securement.

✓ Lights and reflectors.
- Parking, clearance, and identification lights clean, operating, and proper color (amber at front).
- Reflectors clean and proper color (amber at front).

✓ Right front turn signal light clean, operating, and proper color (amber or white on signals facing forward).

Right Side

✓ Right front: check all items as done on left front.

✓ Primary and secondary safety cab locks engaged (if cab-over-engine design).

✓ Right fuel tank(s).
- Securely mounted, not damaged, or leaking.
- Fuel crossover line secure.
- Tank(s) contain enough fuel.
- Cap(s) on and secure.

✓ Condition of visible parts.
- Rear of engine — not leaking.
- Transmission — not leaking.
- Exhaust system — secure, not leaking, not touching wires, fuel, or air lines.
- Frame and cross members — no bends, cracks.
- Air lines and electrical wiring — secured against snagging, rubbing, wearing.
- Spare tire carrier or rack not damaged (if so equipped).
- Spare tire and/or wheel securely mounted in rack.
- Spare tire and wheel adequate (proper size, properly inflated).

✓ Cargo securement (trucks).
- Cargo properly blocked, braced, tied, chained, etc.
- Header board adequate, secure (if required).
- Side boards, stakes strong enough, free of damage, properly set in place (if so equipped).
- Canvas or tarp (if required) properly secured to prevent tearing, billowing, or blocking of mirrors.
- If oversize, all required signs (flags, lamps, and reflectors) must be safely and properly mounted and all required permits in driver's possession.
- Curbside cargo compartment doors securely closed, latched/locked, required security seals in place.

Right Rear

✓ Condition of wheels and rims — no missing, bent, broken spacers, studs, clamps, or lugs.

✓ Condition of tires — properly inflated, valve stems and caps OK, no serious cuts, bulges, tread wear, tires not rubbing each other, and nothing stuck between them.

✓ Tires same type, e.g., not mixed radial and bias types.

✓ Tires evenly matched (same sizes).

✓ Wheel bearing/seals not leaking.

✓ Suspension
- Condition of spring(s), spring hangers, shackles, and u-bolts.
- Axle secure.
- Powered axle(s) not leaking lube (gear oil).
- Condition of torque rod arms, bushings.
- Condition of shock absorber(s).
- If retractable axle equipped, check condition of lift mechanism. If air powered, check for leaks.

✓ Brakes.
- Brake adjustment.
- Condition of brake drum(s).
- Condition of hoses — look for any wear due to rubbing.

✓ Lights and reflectors.
- Side-marker lights clean, operating, and proper color (red at rear, others amber).
- Side-marker reflectors clean and proper color (red at rear, others amber).

Rear

✓ Lights and reflectors.
- Rear clearance and identification lights clean, operating, and proper color (red at rear).
- Reflectors clean and proper color (red at rear).
- Taillights clean, operating, and proper color (red at rear).
- Right rear turn signal operating, and proper color (red, yellow, or amber at rear).

✓ License plate(s) present, clean, and secured.

✓ Splash guards present, not damaged, properly fastened, not dragging on ground or rubbing tires.

✓ Cargo secure (trucks).
- Cargo properly blocked, braced, tied, chained, etc.
- Tailboards up and properly secured.
- End gates free of damage, properly secured in stake sockets.
- Canvas or tarp (if required) properly secured to prevent tearing or billowing to block either the rearview mirrors or to cover rear lights.
- If over-length, or over-width, make sure all signs and/or additional lights/flags are safely and properly mounted and all required permits are in driver's possession.
- Rear doors securely closed, latched/locked.

Left Side

✓ Check all items as done on right side, plus:
- Battery(ies) (if not mounted in engine compartment).
- Battery(ies) box securely mounted to vehicle.
- Box has secure cover.
- Battery(ies) secured against movement.
- Battery(ies) not broken or leaking.
- Fluid in battery(ies) at proper level (except maintenance-free type).
- Cell caps present and securely tightened (except maintenance-free type).
- Vents in cell caps free of foreign material (except maintenance-free type).

6: Check Signal Lights

Get In and Turn Off Lights.

✓ Turn off all lights.

✓ Turn on stop lights (apply trailer hand brake or have a helper put on the brake pedal).

✓ Turn on left turn signal lights.

Get Out and Check Lights.

✓ Left front turn signal light clean, operating and proper color (amber or white on signals facing the front).

✓ Left rear turn signal light and both stop lights clean, operating, and proper color (red, yellow, or amber).

Get In Vehicle.

- ✓ Turn off lights not needed for driving.
- ✓ Check for all required papers, trip manifests, permits, etc.
- ✓ Secure all loose articles in cab (they might interfere with operation of the controls or hit you in a crash).
- ✓ Start the engine.

7: Start the Engine and Check Brake System

Test for Hydraulic Leaks. If the vehicle has hydraulic brakes, pump the brake pedal three times. Then apply firm pressure to the pedal and hold for five seconds. The pedal should not move. If it does, there may be a leak or other problem. Get it fixed before driving.

If the vehicle has air brakes, do the checks described in Sections 5 and 6 of this manual.

Test Parking Brake

- ✓ Fasten seat belt.
- ✓ Allow vehicle to move forward slowly.
- ✓ Apply parking brake.
- ✓ If it doesn't stop vehicle, it is faulty; get it fixed.

Test Service Brake Stopping Action

- ✓ Go about five miles per hour.
- ✓ Push brake pedal firmly.
- ✓ "Pulling" to one side or the other can mean brake trouble.
- ✓ Any unusual brake pedal "feel" or delayed stopping action can mean trouble.

This completes the pre-trip inspection.

If you find anything unsafe during the pre-trip inspection, get it fixed. Federal and state laws forbid operating an unsafe vehicle.

Inspection During a Trip

Check Vehicle Operation Regularly

You should check:

- ✓ Instruments.
- ✓ Air pressure gauge (if you have air brakes).
- ✓ Temperature gauges.
- ✓ Pressure gauges.
- ✓ Ammeter/voltmeter.
- ✓ Mirrors.
- ✓ Tires.
- ✓ Cargo, cargo covers.

If you see, hear, smell, or feel anything that might mean trouble, check it out.

Safety Inspection

✓ Drivers of trucks and truck tractors when transporting cargo must inspect the securement of the cargo within the first 25 miles of a trip and every 150 miles or every three hours (whichever comes first) afterward.

After-trip Inspection and Report

You may have to make a written report each day on the condition of the vehicle(s) you drove. Report anything affecting safety or possibly leading to mechanical breakdown.

The vehicle inspection report tells the motor carrier about problems that may need fixing. Keep a copy of your report in the vehicle for one day. That way, the next driver can learn about any problems you have found.

Test Your Knowledge

1. Name some things you should check on the front of your vehicle during the walk-around inspection.
2. What should wheel bearing seals be checked for?
3. How many red reflective triangles should you carry?
4. How do you test hydraulic brakes for leaks?
5. Can you bring the “vehicle inspection memory aide” with you to the test?
6. Why put the starter switch key in your pocket during pre-trip inspection?

These questions may be on the test. If you can’t answer them all, re-read about the seven-step inspection method.

2.2 Basic Control of Your Vehicle

To drive a vehicle safely, you must be able to control its speed and direction. Safe operation of a commercial vehicle requires skill in:

✓ Accelerating.

✓ Steering.

✓ Shifting gears.

✓ Braking.

Fasten your seatbelt when on the road. Apply the parking brake when you leave your vehicle.

Accelerating

Don’t roll back when you start. You may hit someone behind you. Partly engage the clutch before you take your right foot off the brake. Put on the parking brake whenever necessary to keep from rolling back. Release the parking brake only when you have applied enough engine power to keep from rolling back. On a tractor-trailer equipped with a trailer brake hand valve, the hand valve can be applied to keep from rolling back.

Speed up smoothly and gradually so the vehicle does not jerk. Rough acceleration can cause mechanical damage. When pulling a trailer, rough acceleration can damage the coupling.

Speed up very gradually when traction is poor, as in rain or snow. If you use too much power, the drive wheels may spin. You could lose control. If the drive wheels begin to spin, take your foot off the accelerator.

Steering

Hold the Wheel Properly. Hold the steering wheel firmly with both hands. Your hands should be on opposite sides of the wheel. If you hit a curb or pothole (chuckhole), the wheel could pull away from your hands unless you have a firm hold.

Backing Safely

Because you cannot see everything behind your vehicle, ***backing is always dangerous***. Avoid backing whenever you can. When you park, try to park so you will be able to pull forward when you leave. When you have to back, here are a few simple safety rules:

- ✓ Look at your path.
- ✓ Back slowly.
- ✓ Back and turn toward the driver's side whenever possible.
- ✓ Use a helper whenever possible.

These rules are discussed in turn below.

Look at Your Path. Look at your line of travel ***before*** you begin. Get out and walk around the vehicle. Check your clearance to the sides and overhead in and near the path your vehicle will take.

Back Slowly. Always back as slowly as possible. Use the lowest reverse gear. That way you can more easily correct any steering errors. You also can stop quickly if necessary.

Back and Turn Toward the Driver's Side. Back to the driver's side so you can see better. Backing toward the right side is very dangerous because you can't see as well. If you back and turn toward the driver's side, you can watch the rear of your vehicle by looking out the side window. Use driver-side backing — even if it means going around the block to put your vehicle in this position. The added safety is worth it.

Use a Helper. Use a helper when you can. There are blind spots you can't see. That's why a helper is important. The helper should stand near the back of your vehicle where you can see the helper. Before you begin backing, work out a set of hand signals that you both understand. Agree on a signal for "stop."

Backing With a Trailer

Backing With a Trailer. When backing a car, straight truck, or bus, you turn the top of the steering wheel toward the direction you want to go. When backing a trailer, you turn the steering wheel in the opposite direction. Once the trailer starts to turn, you must turn the wheel the other way to follow the trailer.

Whenever you back with a trailer, try to position your vehicle so you can back in a straight line. If you must back on a curved path, back to the driver's side so you can see.

Back Slowly. This will let you make corrections before you get too far off course.

Use the Mirrors. The mirrors will help you see whether the trailer is drifting to one side or the other.

Correct Drift Immediately. As soon as you see the trailer getting off the proper path, correct it by turning the top of the steering wheel in the direction of the drift.

Pull Forward. When backing a trailer, make pull-ups to re-position your vehicle as needed.

Test Your Knowledge

1. Why should you back toward the driver's side?
2. What is a pull-up?
3. If stopped on a hill, how can you start moving without rolling back?
4. When backing, why is it important to use a helper?
5. What's the most important hand signal that you and the helper should agree on?

These questions may be on the test. If you can't answer them all, re-read Section 2.2: Basic Control of Your Vehicle.

2.3 Shifting Gears

Correct shifting of gears is important. If you can't get your vehicle into the right gear while driving, you will have less control.

Manual Transmissions

Basic Method for Shifting Up. Most heavy vehicles with manual transmissions require double clutching to change gears. This is the basic method:

1. Release accelerator, push in clutch and shift to neutral at the same time.
2. Release clutch.
3. Let engine and gears ***slow down*** to the rpm required for the next gear (this takes practice).
4. Push in clutch and shift to the higher gear at the same time.
5. Release clutch and press accelerator at the same time.

Shifting gears using double clutching requires practice. If you remain too long in neutral, you may have difficulty putting the vehicle into the next gear. If so, don't try to force it. Return to neutral, release clutch, increase engine speed to match road speed, and try again.

Knowing When to Shift Up. There are two ways of knowing when to shift:

✓ **Use engine speed (rpm).** Study the driver's manual for your vehicle and learn the operating rpm range. Watch your tachometer, and shift up when your engine reaches the top of the range. (Some newer vehicles use "progressive" shifting: the rpm at which you shift becomes higher as you move up in the gears. Find out what's right for the vehicle you will operate.)

✓ **Use road speed (mph).** Learn what speeds are correct for each gear. Then, by using the speedometer, you'll know when to shift up.

With either method, you may learn to use engine sounds to know when to shift.

Basic Procedures for Shifting Down

1. Release accelerator, push in clutch, and shift to neutral at the same time.
2. Release clutch.
3. Press accelerator, ***increase*** engine and gear speed to the rpm required in the lower gear.

4. Push in clutch and shift to lower gear at the same time.
5. Release clutch and press accelerator at the same time.

Downshifting, like upshifting, requires knowing when to shift. Use either the tachometer or the speedometer and downshift at the right rpm or road speed.

Special conditions where you should downshift are:

✓ **Before Starting Down a Hill.** Slow down and shift down to a speed that you can control without using the brakes hard. Otherwise the brakes can overheat and lose their braking power. Downshift ***before*** starting down the hill. Make sure you are in a low enough gear, usually lower than the gear required to climb the same hill.

✓ **Before Entering a Curve.** Slow down to a safe speed, and downshift to the right gear before entering the curve. This lets you use some power through the curve to help the vehicle be more stable while turning. It also lets you speed up as soon as you are out of the curve.

Multi-speed Rear Axles and Auxiliary Transmissions

Multi-speed rear axles and auxiliary transmissions are used on many vehicles to provide extra gears. You usually control them by a selector knob or switch on the gearshift lever of the main transmission. There are many different shift patterns. Learn the right way to shift gears in the vehicle you will drive.

Automatic Transmissions

Some vehicles have automatic transmissions. You can select a low range to get greater engine braking when going down grades. The lower ranges prevent the transmission from shifting up beyond the selected gear (unless the governor rpm is exceeded). It is very important to use this braking effect when going down grades.

Retarders

Some vehicles have “retarders.” Retarders help slow a vehicle, reducing the need for using your brakes. They reduce brake wear and give you another way to slow down. There are many types of retarders (exhaust, engine, hydraulic, electric). All retarders can be turned on or off by the driver. On some the retarding power can be adjusted. When turned “on,” retarders apply their braking power (to the drive wheels only) whenever you let up on the accelerator pedal all the way.

Caution. When your drive wheels have poor traction, the retarder may cause them to skid. Therefore, you should turn off the retarder whenever the road is wet, icy, or snow covered.

Test Your Knowledge

1. What are the two special conditions where you should downshift?
2. When should you downshift automatic transmissions?
3. Retarders keep you from skidding when the road is slippery. True or False?
4. What are the two ways to know when to shift?

These questions may be on the test. If you can’t answer them all, re-read Section 2.3: Shifting Gears.

2.4 Seeing

To be a safe driver you need to know what's going on all around your vehicle. Not looking properly is a major cause of accidents.

Seeing Ahead

All drivers look ahead; but many don't look ***far enough*** ahead.

Importance of Looking Far Enough Ahead. Because stopping or changing lanes can take a lot of distance, knowing what the traffic is doing on all sides of you is very important. You need to look well ahead to make sure you have room to make these moves safely.

How Far Ahead to Look. Most good drivers look 12 to 15 seconds ahead. That means looking ahead the distance you will travel in 12 to 15 seconds. At lower speeds, that's about one block. At highway speeds, it's about a quarter of a mile. If you're not looking that far ahead, you may have to stop too quickly or make quick lane changes. Looking 12 to 15 seconds ahead doesn't mean not paying attention to things that are closer. Good drivers shift their attention back and forth, near and far.

Look for Traffic. Look for vehicles coming onto the highway, into your lane, or turning. Watch for brake lights from slowing vehicles. By seeing these things far enough ahead, you can change your speed or change lanes, if necessary, to avoid a problem.

Look for Road Conditions. Look for hills and curves — anything you'll have to slow or change lanes for. Pay attention to traffic signals and signs. If a light has been green for a long time, it will probably change before you get there. Start slowing down and be ready to stop. Traffic signs may alert you to road conditions where you may have to change speed.

Seeing to the Sides and Rear

It's important to know what's going on behind and to the sides. Check your mirrors regularly. Check more often in special situations.

Mirror Adjustment. Mirror adjustment should be checked prior to the start of any trip and can only be checked accurately when the trailer(s) are straight. You should check and adjust each mirror as needed.

Regular Checks. You need to make regular checks of your mirrors to be aware of traffic and to check your vehicle.

Traffic. Check your mirrors for vehicles on either side and in back of you. In an emergency, you may need to know whether you can make a quick lane change. Use your mirrors to spot overtaking vehicles. There are "blind spots" that your mirrors cannot show you. Check your mirrors regularly to know where other vehicles are around you, and to see if they move into your blind spots.

Check Your Vehicle. Use the mirrors to keep an eye on your tires. It's one way to spot a tire fire. If you're carrying open cargo, you can use the mirrors to check it. Look for loose straps, ropes, or chains. Watch for a flapping or ballooning tarp.

Special Situations. Special situations require more than regular mirror checks. These are lane changes, turns, merges, and tight maneuvers.

Lane Changes. You need to check your mirror to make sure no one is alongside you or about to pass you. Check your mirrors:

- ✓ Before you change lanes to make sure there is enough room.
- ✓ After you have signaled to check that no one has moved into your blind spot.
- ✓ Right after you start the lane change to double-check that your path is clear.
- ✓ After you complete the lane change.

Turns. In turns, check your mirrors to make sure the rear of your vehicle will not hit anything.

Merges. When merging, use your mirrors to make sure the gap in traffic is large enough for you to enter safely.

Tight Maneuvers. Any time you are driving in close quarters, check your mirrors often. Make sure you have enough clearance.

How to Use Mirrors. Use mirrors correctly by checking them quickly and understanding what you see.

Checking Quickly. When you use your mirrors while driving on the road, check quickly. Look back and forth between the mirrors and the road ahead. Don't focus on the mirrors for too long. Otherwise, you will travel quite a distance without knowing what's happening ahead.

Understanding What You See. Many large vehicles have curved (convex, "fisheye," "spot," "bugeye") mirrors that show a wider area than flat mirrors. This is often helpful. But everything appears smaller in a convex mirror than it would if you were looking at it directly. Things also seem farther away than they really are. It's important to realize this and to allow for it.

2.5 Communicating

Signal Your Intentions

Other drivers can't know what you are going to do until you tell them.

Signaling what you intend to do is important for safety. Here are some general rules for signaling.

Turns. There are three good rules for using turn signals.

1. Signal early. Signal well before you turn. It is the best way to keep others from trying to pass you.
2. Signal continuously. You need both hands on the wheel to turn safely. Don't cancel the signal until you have completed the turn.
3. Cancel your signal. Don't forget to turn off your turn signal after you've turned (if you don't have self-canceling signals).

Lane Changes. Put your turn signal on before changing lanes. Change lanes slowly and smoothly. That way a driver you didn't see may have a chance to honk his/her horn or avoid your vehicle.

Slowing Down. Warn drivers behind you when you see you'll need to slow down. A few light taps on the brake pedal — enough to flash the brake lights — should warn following drivers. Use the four-way emergency flashers for times when you are driving very slow or are stopped. Warn other drivers in any of the following situations:

✓ **Trouble Ahead.** The size of your vehicle may make it hard for drivers behind you to see hazards ahead. If you see a hazard that will require slowing down, warn the drivers behind by flashing your brake lights.

✓ **Tight Turns.** Most car drivers don't know how slow you have to go to make a tight turn in a large vehicle. Give drivers behind you warning by braking early and slowing gradually.

✓ **Stopping on the Road.** Truck and bus drivers sometimes stop in the road to unload cargo or passengers or to stop at a railroad crossing. Warn following drivers by flashing your brake lights. Don't stop suddenly.

✓ **Driving Slowly.** Drivers often do not realize how fast they are catching up to a slow vehicle until they are very close. If you must drive slowly, alert following drivers by turning on your emergency flashers if it is legal. (Laws regarding the use of flashers differ from one state to another. Check the laws of the states where you will drive.)

Don't Direct Traffic. Some drivers try to help out others by signaling when it is safe to pass. You should not do this. You could cause an accident. You could be blamed and it could cost you many thousands of dollars.

Communicating Your Presence

Other drivers may not notice your vehicle even when it's in plain sight. Let them know you're there to help prevent accidents.

When Passing. Whenever you are about to pass a vehicle, pedestrian, or bicyclist, assume they don't see you. They could suddenly move in front of you. When it is legal, tap the horn lightly or, at night, flash your lights from low to high beam and back. And drive carefully enough to avoid a crash even if they don't see or hear you.

When It's Hard to See. At dawn or dusk or in rain or snow, you need to make yourself easier to see. If you are having trouble seeing other vehicles, other drivers will have trouble seeing you. Turn on your lights. Use the headlights, not just the identification or clearance lights. Use the low beams; high beams can bother people in the daytime as well as at night.

When Parked at the Side of the Road. When you pull off the road and stop, be sure to turn on the four-way emergency flashers. This is important at night. Don't trust the taillights to give warning. Drivers have crashed into the rear of a parked vehicle because they thought it was moving normally.

If you must stop on a road or the shoulder of any road, you must put out your emergency warning devices within ten minutes. Place your warning devices at the following locations:

- ✓ If you stop on a two-lane road carrying traffic in both directions or on an undivided highway, place warning devices within ten feet of the front or rear corners to mark the location of the vehicle and 100 feet behind and ahead of the vehicle, on the shoulder or in the lane you stopped in. (See Figure 2-8.)
- ✓ Back beyond any hill, curve, or other obstruction that prevents other drivers from seeing the vehicle within 500 feet. (See Figure 2-9.)
- ✓ If you must stop on or by a one-way or divided highway, place warning devices 10 feet, 100 feet, and 200 feet toward the approaching traffic. (See Figure 2-10.)

When putting out the triangles, hold them between yourself and the oncoming traffic for your own safety (so other drivers can see you).

Use Your Horn When Needed. Your horn can let others know you're there. It can help to avoid a crash. Use your horn when needed. However, it can startle others and could be dangerous when used unnecessarily.

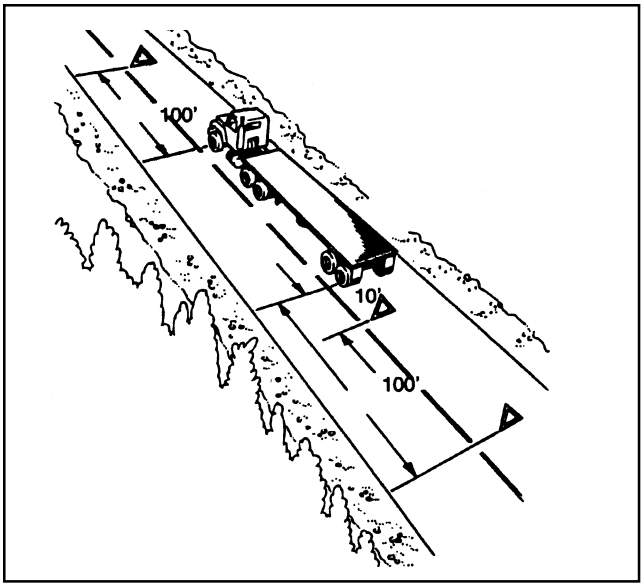

Figure 2-8

Warning Device Placement: Two-lane (traffic in both directions) or Undivided Highway

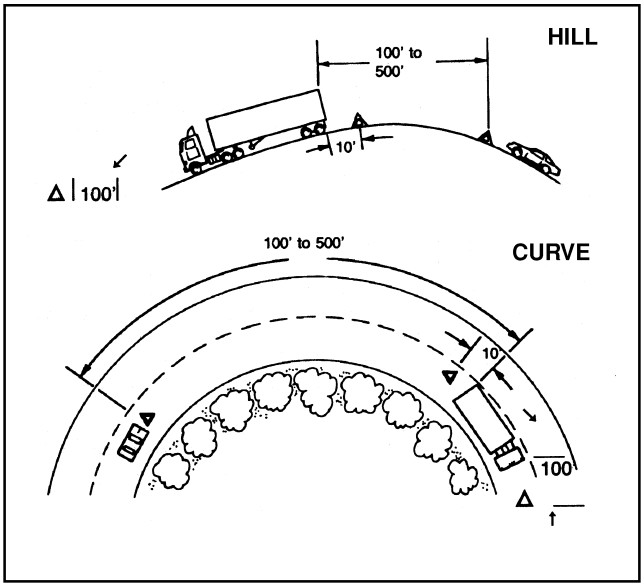

Figure 2-9

Warning Device Placement: Obstructed View

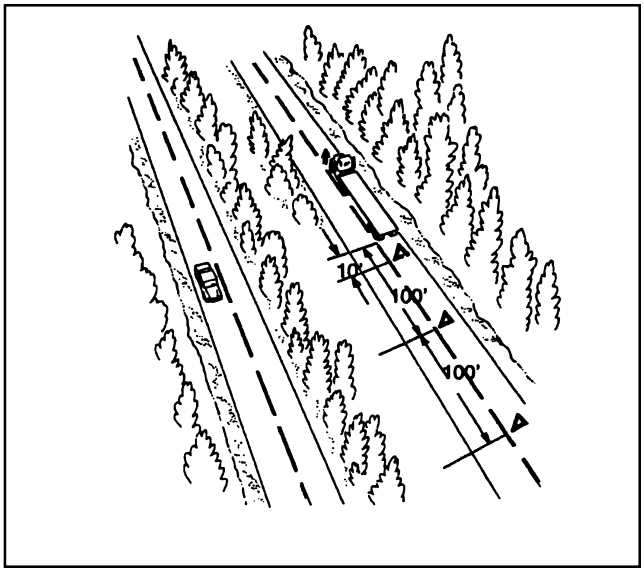

Figure 2-10

Warning Device Placement: One Way or Divided Highway

2.6 Controlling Speed

Driving too fast is a major cause of fatal crashes. You must adjust your speed depending on driving conditions. These include traction, curves, visibility, traffic, and hills.

Speed and Stopping Distances

There are three things that add up to total stopping distance:

	Perception Distance
+	Reaction Distance
+	Braking Distance
=	Total Stopping Distance

✓ **Perception Distance.** This is the distance your vehicle travels from the time your eyes see a hazard until your brain recognizes it. The perception time for an alert driver is about 3/4 second. At 55 mph, you travel 60 feet in 3/4 second.

✓ **Reaction Distance.** The distance traveled from the time your brain tells your foot to move from the accelerator until your foot is actually pushing the brake pedal. The average driver has a reaction time of 3/4 second. This accounts for an additional 60 feet traveled at 55 mph.

✓ **Braking Distance.** The distance it takes to stop once the brakes are put on. At 55 mph on dry pavement with good brakes it can take a heavy vehicle about 170 feet to stop. It takes about 4 1/2 seconds.

✓ **Total Stopping Distance.** At 55 mph it will take about six seconds to stop and your vehicle will travel about the distance of a football field. (60 + 60 + 170 = 290 feet.)

The Effect of Speed on Stopping Distance. Whenever you double your speed, it takes about four times as much distance to stop and your vehicle will have ***four*** times the destructive power if it crashes. High speeds increase stopping distances greatly. By slowing down a little, you can gain a lot in reduced braking distance.

The Effect of Vehicle Weight on Stopping Distance. The heavier the vehicle, the more work the brakes must do to stop it and the more heat they absorb. But the brakes, tires, springs, and shock absorbers on heavy vehicles are designed to work best when the vehicle is fully loaded. ***Empty*** trucks require

greater stopping distances, because an empty vehicle has less traction. It can bounce and lock up its wheels, giving much poorer braking. (This is not usually the case with buses.)

Matching Speed to the Road Surface

You can't steer or brake a vehicle unless you have traction. Traction is friction between the tires and the road. There are some road conditions that reduce traction and call for lower speeds.

Slippery Surfaces. It will take longer to stop and it will be harder to turn without skidding when the road is slippery. You must drive slower to be able to stop in the same distance as on a dry road. Wet roads can double stopping distance. Reduce speed by about one third (e.g., slow from 55 to about 35 mph) on a wet road. On packed snow, reduce speed by a half, or more. If the surface is icy, reduce speed to a crawl and stop driving as soon as you can safely do so.

Identifying Slippery Surfaces. Sometimes it's hard to know if the road is slippery. Here are some signs of slippery roads.

- ✓ **Shaded Areas.** Shady parts of the road will remain icy and slippery long after open areas have melted.
- ✓ **Bridges.** When the temperature drops, bridges will freeze before the road will. Be especially careful when the temperature is close to 32 degrees F.
- ✓ **Melting Ice.** Slight melting will make ice wet. Wet ice is much more slippery than ice that is not wet.
- ✓ **Black Ice.** Black ice is a thin layer that is clear enough that you can see the road underneath it. It makes the road look wet. Any time the temperature is below freezing and the road looks wet, watch out for black ice.
- ✓ **Vehicle Icing.** An easy way to check for ice is to open the window and feel the front of the mirror, mirror support, or antenna. If there's ice on these, the road surface is probably starting to ice up.
- ✓ **Just After Rain Begins.** Right after it starts to rain, the water mixes with oil left on the road by vehicles. This makes the road very slippery. If the rain continues, it will wash the oil away.
- ✓ **Hydroplaning.** In some weather, water or slush collects on the road. When this happens, your vehicle can hydroplane. It's like water skiing: the tires lose their contact with the road and have little or no traction. You may not be able to steer or brake. You can regain control by releasing the accelerator and pushing in the clutch. This will slow your vehicle and let the wheels turn freely. If the vehicle is hydroplaning, do not use the brakes to slow down. If the drive wheels start to skid, push in the clutch and let them turn freely.

  It does not take a lot of water to cause hydroplaning. Hydroplaning can occur at speeds as low as 30 mph if there is a lot of water. Hydroplaning is more likely if tire pressure is low or the tread is worn. (The grooves in a tire carry away the water; if they aren't deep, they don't work well.) Be especially careful driving through puddles. The water is often deep enough to cause hydroplaning.

Speed and Curves

Drivers must adjust their speed for curves in the road. If you take a curve too fast, two things can happen. The tires can lose their traction and continue straight ahead, so you skid off the road. Or, the tires may keep their traction and the vehicle rolls over. Tests have shown that trucks with a high center of gravity can roll over at the posted speed limit for a curve.

Slow to a safe speed ***before*** you enter a curve. Braking in a curve is dangerous because it is easier to lock the wheels and cause a skid. Slow down as needed. Don't ever exceed the posted speed limit for the curve. Be in a gear that will let you accelerate slightly in the curve. This will help you keep control.

Speed and Distance Ahead

You should always be able to stop within the distance you can see ahead. Fog, rain or other conditions may require that you slow down to be able to stop in the distance you can see. At night, you can't see as far with low beams as you can with high beams. When you must use low beams, slow down.

Speed and Traffic Flow

When you're driving in heavy traffic, the safest speed is the speed of other vehicles. Vehicles going the same direction at the same speed are not likely to run into one another. Drive at the speed of the traffic, if you can without going at an illegal or unsafe speed. Keep a safe following distance.

The main reason drivers exceed speed limits is to save time. But anyone trying to drive faster than the speed of traffic will not be able to save much time. The risks involved are not worth it. If you go faster than the speed of other traffic, you'll have to keep passing other vehicles. This increases the chance of a crash; and it is more tiring. Fatigue increases the chance of a crash. Going with the flow of traffic is safer and easier.

Speed on Downgrades

Your vehicle's speed will increase on downgrades because of gravity. Your most important objective is to select and maintain a speed that is not too fast for the:

- ✓ Total weight of the vehicle and cargo.
- ✓ Length of the grade.
- ✓ Steepness of the grade.
- ✓ Road conditions.
- ✓ Weather.

If a speed limit is posted, or there is a sign indicating "Maximum Safe Speed," never exceed the speed shown. Also, look for and heed warning signs indicating the length and steepness of the grade. You must use the braking effect of the engine as the principal way of controlling your speed on downgrades. The braking effect of the engine is greatest when it is near the governed rpms and the transmission is in the lower gears. Save your brakes so you will be able to slow or stop as required by road and traffic conditions. Shift your transmission to a low gear before starting down the grade and use the proper braking techniques. Please read carefully the section on going down long steep downgrades safely in "Mountain Driving."

Test Your Knowledge

1. How far ahead does the manual say you should look?
2. What are two main things to look for ahead?
3. What's your most important way to see the sides and rear?
4. What does "communicating" mean in safe driving?
5. Where should your reflectors be placed when stopped on a divided highway?
6. What three things add up to total stopping distance?
7. If you go twice as fast, will your stopping distance increase by twice or four times?
8. Empty trucks have the best braking. True or False?
9. What is hydroplaning?
10. What is "black ice"?

These questions may be on the test. If you can't answer them all, re-read Sections 2.4, 2.5, and 2.6.

2.7 Managing Space

To be a safe driver, you need space all around your vehicle. When things go wrong, space gives you time to think and to take action.

To have space available when something goes wrong, you need to ***manage*** space. While this is true for all drivers, it is very important for large vehicles. They take up more space and they require more space for stopping and turning.

Space Ahead

Of all the space around your vehicle, it is the area ahead of the vehicle — the space you're driving in — that is most important.

The Need for Space Ahead. You need space ahead in case you must suddenly stop. According to accident reports, the vehicle that trucks and buses most often run into is the one in front of them. The most frequent cause is following too closely. Remember, if the vehicle ahead of you is smaller than yours, it can probably stop faster than you can. You may crash if you are following too closely.

How Much Space? How much space should you keep in front of you? One good rule says you need at least one second for each 10 feet of vehicle length at speeds below 40 mph. At greater speeds, you must add one second for safety. For example, if you are driving a 40-foot vehicle, you should leave four seconds between you and the vehicle ahead. In a 60-foot rig, you'll need six seconds. Over 40 mph, you'd need five seconds for a 40-foot vehicle and seven seconds for a 60-foot vehicle.

To know how much space you have, wait until the vehicle ahead passes a shadow on the road, a pavement marking, or some other clear landmark. Then count off the seconds like this: "one thousand-and-one, one thousand-and-two" and so on, until you reach the same spot. Compare your count with the rule of one second for every ten feet in length. If you are driving a 40 foot truck and only counted up to two seconds, you're too close. Drop back a little and count again until you have four seconds of following distance (or five seconds, if you're going over 40 mph). After a little practice, you will know how far back you should be. Remember to add one second for speeds above 40 mph. Also remember that when the road is slippery, you need ***much more space*** to stop.

Space Behind

You can't stop others from following you too closely. But there are things you can do to make it safer.

Stay to the Right. Heavy vehicles are often tailgated when they can't keep up with the speed of traffic. This often happens when you're going uphill. If a heavy load is slowing you down, stay in the right lane if you can. Going uphill, you should not pass another slow vehicle unless you can get around quickly and safely.

Dealing With Tailgaters Safely. In a large vehicle, it's often hard to see whether a vehicle is close behind you. You may be tailgated:

- ✓ When you are traveling slowly. Drivers trapped behind slow vehicles often follow closely.
- ✓ In bad weather. Many car drivers follow large vehicles closely during bad weather, especially when it is hard to see the road ahead.

If you find yourself being tailgated, here are some things you can do to reduce the chances of a crash:

- ✓ Avoid quick changes. If you have to slow down or turn, signal early, and reduce speed very gradually.
- ✓ Increase your following distance. Opening up room in front of you will help you to avoid having to make sudden speed or direction changes. It also makes it easier for the tailgater to get around you.
- ✓ Don't speed up. It's safer to be tailgated at a low speed than a high speed.
- ✓ Avoid tricks. Don't turn on your taillights or flash your brake lights. Follow the suggestions above.

Space to the Sides

Commercial vehicles are often wide and take up most of a lane. Safe drivers will manage what little space they have. You can do this by keeping your vehicle centered in your lane and by not driving alongside others.

Staying Centered in a Lane. You need to keep your vehicle centered in the lane to keep safe clearance on either side. If your vehicle is wide, you have little room to spare.

Traveling Next to Others. There are two dangers in traveling alongside other vehicles:

✓ Another driver may change lanes suddenly and turn into your vehicle.

✓ You may be trapped when ***you*** need to change lanes.

Find an open spot where you aren't near other traffic. When traffic is heavy, it may be hard to find an open spot. If you must travel near other vehicles, try to keep as much space as possible between you and them. Also, drop back or pull forward so that you are sure the other driver can see you.

Strong Winds. Strong winds make it difficult to stay in your lane. The problem is usually worse for lighter vehicles. This problem can be especially bad coming out of tunnels. Don't drive alongside others if you can avoid it.

Space Overhead

Hitting overhead objects is a danger. Make sure you always have overhead clearance.

✓ Don't assume that the heights posted at bridges and overpasses are correct. Re-paving or packed snow may have reduced the clearances since the heights were posted.

✓ The weight of a cargo van changes its height. An empty van is higher than a loaded one. That you got under a bridge when your vehicle was loaded does not mean that you can do it when your vehicle is empty.

✓ If you doubt you have safe space to pass under an object, go slowly. If you aren't sure you can make it, take another route. Warnings are often posted on low bridges or underpasses, but sometimes they are not.

✓ Some roads can cause a vehicle to tilt. There can be a problem clearing objects along the edge of the road, such as signs, trees, or bridge supports. Where this is a problem, drive a little closer to the center of the road.

✓ Before you back into an area, get out and check for overhanging objects, such as trees, branches, or electric wires. It's easy to miss seeing them while you are backing. (Also check for other hazards at the same time.)

Space Below

Many drivers forget about the space under their vehicles. That space can be very small when a vehicle is heavily loaded. Railroad tracks can stick up several inches. This is often a problem on dirt roads and in unpaved yards where the surface around the tracks can wear away. Don't take a chance on getting hung up halfway across. Drainage channels across roads can cause the end of some vehicles to drag. Cross such depressions carefully.

Space for Turns

The space around a truck or bus is important in turns. Because of wide turning and offtracking, large vehicles can hit other vehicles or objects during turns.

Right Turns. Here are some rules to help prevent right-turn crashes:

✓ Turn slowly to give yourself and others more time to avoid problems.

✓ If you are driving a truck or bus that cannot make the right turn without swinging into another lane, turn wide as you ***complete*** the turn, as shown in Figure 2-11. Keep the rear of your vehicle close to the curb. This will stop other drivers from passing you on the right.

- ✓ Don't turn wide to the left as you start the turn, as shown in Figure 2-12. A following driver may think you are turning left and try to pass you on the right. You may crash into the other vehicle as you complete your turn.
- ✓ If you must cross into the oncoming lane to make a turn, watch out for vehicles coming toward you. Give them room to go by or to stop. However, don't back up for them, because you might hit someone behind you.

Left Turns. On a left turn, make sure you have reached the center of the intersection before you start the left turn. If you turn too soon, the left side of your vehicle may hit another vehicle because of offtracking.

If there are two turning lanes, always take the right-hand turn lane, as shown in Figure 2-13. Don't start in the inside lane because you may have to swing right to make the turn. Drivers on your left can be more readily seen.

Space Needed to Cross or Enter Traffic

Be aware of the size and weight of your vehicle when you cross or enter traffic. Here are some important things to keep in mind:

- ✓ Because of slow acceleration and the space large vehicles require, you may need a much larger gap to enter traffic than you would in a car.
- ✓ Acceleration varies with the load. Allow more room if your vehicle is heavily loaded.
- ✓ Before you start across a road, make sure you can get all the way across before traffic reaches you.

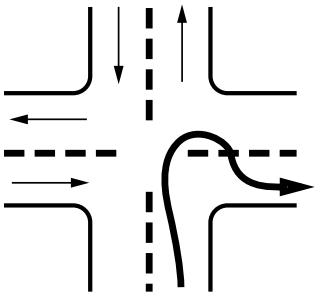

Figure 2-11

Do This

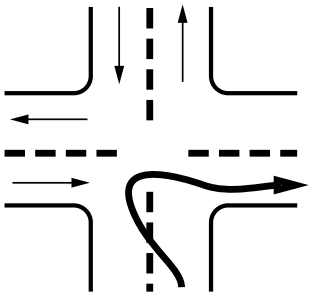

Figure 2-12

Don't Do This

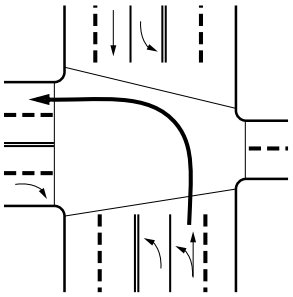

Figure 2-13

If there are two left turn lanes, use the right-hand lane

Test Your Knowledge

1. How do you find out how many seconds of following distance space you have?
2. If you are driving a 30-foot vehicle at 55 mph, how many seconds of following distance should you allow?
3. You should decrease your following distance if somebody is following you too closely. True or False?
4. If you swing wide to the left before turning right, another driver may try to pass you on the right. True or False?

These questions may be on the test. If you can't answer them all, re-read Section 2.7: Managing Space.

2.8 Driving at Night

It's More Dangerous

You are at a greater risk when you drive at night. Drivers can't see hazards as soon as in daylight, so they have less time to respond. Drivers caught by surprise are less able to avoid a crash.

The problems of night driving involve the driver, the roadway, and the vehicle. We will discuss each of these factors.

Driver Factors

Vision. People can't see as sharply at night or in dim light. Also, their eyes need time to adjust to seeing in dim light. Most people have noticed this when walking into a dark movie theater.

Glare. Drivers can be blinded for a short time by bright light. It takes time to recover from this blindness. Older drivers are especially bothered by glare. Most people have been temporarily blinded by camera flash units or by the high beams of an oncoming vehicle. It can take several seconds to recover from glare. Even two seconds of glare blindness can be dangerous. A vehicle going 55 mph will travel more than half the distance of a football field during that time. Don't look directly at bright lights when driving. Look at the right side of the road. Watch the side lines when someone coming toward you has very bright lights.

Fatigue and Lack of Alertness. Fatigue (being tired) and lack of alertness are bigger problems at night. The body's need for sleep is beyond a person's control. Most people are less alert at night, especially after midnight. This is particularly true if you have been driving for a long time. Drivers may not see hazards as soon or react as quickly, so the chance of a crash is greater. If you are sleepy, the only safe cure is to get off the road and get some sleep. If you don't, you risk your life and the lives of others.

Roadway Factors

Poor Lighting. In the daytime there is usually enough light to see well. This is not true at night. Some areas may have bright street lights, but many areas will have poor lighting. On most roads you will probably have to depend entirely on your headlights.

Less light means you will not be able to see hazards as well as in daytime. Road users who do not have lights are hard to see. There are many accidents at night involving pedestrians, joggers, bicyclists, and animals.

Even when there are lights, the road scene can be confusing. Traffic signals and hazards can be hard to see against a backdrop of signs, shop windows, and other lights.

Drive slower when lighting is poor or confusing. Drive slowly enough to be sure you can stop in the distance you can see ahead.

Drunk Drivers. Drunk drivers and drivers under the influence of drugs are a hazard to themselves and to you. Be especially alert around the closing times for bars and taverns. Watch for drivers who have trouble staying in their lane or maintaining speed, stop without reason, or show other signs of being under the influence of alcohol or drugs.

Vehicle Factors

Headlights. At night your headlights will usually be the main source of light for you to see and for others to see you. You can't see nearly as much with your headlights as you can see in the daytime. With low beams you can see ahead about 250 feet and with high beams about 350-500 feet. You must adjust your speed to keep your stopping distance within your sight distance. This means going slow enough to be able to stop within the range of your headlights. Otherwise, by the time you see a hazard, you will not have time to stop.

Night driving can be more dangerous if you have problems with your headlights. Dirty headlights may give only half the light they should. This cuts down on your ability to see, and makes it harder for others

to see you. Make sure your lights are clean and working. Headlights can be out of adjustment. If they don't point in the right direction, they won't give you a good view and they can blind other drivers. Have a qualified person make sure they are adjusted properly.

Other Lights. In order for you to be seen easily, the following must be clean and working properly:

✓ Reflectors.

✓ Marker lights.

✓ Clearance lights.

✓ Taillights.

✓ Identification lights.

Turn Signals and Brake Lights. At night your turn signals and brake lights are even more important for telling other drivers what you intend to do. Make sure you have clean, working turn signals and stop lights.

Windshield and Mirrors. It is more important at night than in the daytime to have a clean windshield and clean mirrors. Bright lights at night can cause dirt on your windshield or mirrors to create a glare of its own, blocking your view. Most people have experienced driving toward the sun just as it has risen or is about to set and found that they can barely see through a windshield that seemed to look OK in the middle of the day. Clean your windshield on the inside and outside for safe driving at night.

Night Driving Procedures

Pre-trip Procedures. Make sure you are rested and alert. If you are drowsy, ***sleep*** before you drive! Even a nap can save your life or the lives of others. If you wear eye glasses, make sure they are clean and unscratched. Don't wear sun glasses at night. Do a complete pre-trip inspection of your vehicle. Pay attention to checking all lights and reflectors and cleaning those you can reach.

Avoid Blinding Others. Glare from your headlights can cause problems for drivers coming toward you. They can also bother drivers going in the same direction you are, when your lights shine in their rearview mirrors. Dim your lights before they cause glare for other drivers. Dim your lights within 500 feet of an oncoming vehicle and when following another vehicle within 500 feet.

Avoid Glare From Oncoming Vehicles. Do not look directly at lights of oncoming vehicles. Look slightly to the right at a right lane or edge marking, if available. If other drivers don't put their low beams on, don't try to "get back at them" by putting your own high beams on. This increases glare for oncoming drivers and increases the chance of a crash.

Use High Beams When You Can. Some drivers make the mistake of always using low beams. This seriously cuts down their ability to see ahead. Use high beams when it is safe and legal to do so. Use them when you are not within 500 feet of an approaching vehicle. Also, don't let the inside of your cab get too bright. This makes it harder to see outside. Keep the interior light off and adjust your instrument lights as low as you can and still be able to read the gauges.

If You Get Sleepy, Stop Driving at the Nearest Safe Place. People often don't realize how close they are to falling asleep even when their eyelids are falling shut. If you can safely do so, look at yourself in a mirror. If you look sleepy, or you just feel sleepy, ***stop driving***! You are in a very dangerous condition. The only safe cure is to sleep.

2.9 Driving in Fog

The best advice for driving in fog is don't. It is preferable that you pull off the road into a rest area or truck stop until visibility is better. If you must drive, be sure to consider the following:

✓ Obey all fog-related warning signs.

✓ Slow before you enter fog.

✓ Turn on all your lights. (Headlights should be on low beams.)

✓ Be prepared for emergency stops.

2.10 Driving in Winter

Vehicle Checks

Make sure your vehicle is ready before driving in winter weather. You should make a regular pre-trip inspection, paying extra attention to the following items:

Coolant Level and Antifreeze Amount. Make sure the cooling system is full and there is enough antifreeze in the system to protect against freezing. This can be checked with a special coolant tester.

Defrosting and Heating Equipment. Make sure the defrosters work. They are needed for safe driving. Make sure the heater is working, and that you know how to operate it. If you use other heaters and expect to need them (e.g., mirror heaters, battery box heaters, fuel tank heaters), check their operation.

Wipers and Washers. Make sure the windshield wiper blades are in good condition. Make sure the wiper blades press against the window hard enough to wipe the windshield clean. Otherwise they may not sweep off snow properly. Make sure the windshield washer works and there is washing fluid contained in the washer reservoir.

Use windshield washer antifreeze to prevent freezing of the washer liquid. If you can't see well enough while driving (for example, if your wipers fail), stop safely and fix the problem.

Tires. Make sure you have enough tread on your tires. The drive tires must provide traction to push the rig over wet pavement and through snow. The steering tires must have traction to steer the vehicle. Enough tread is especially important in winter conditions. You must have at least 4/32 inch tread depth in every major groove on front tires and at least 2/32 inch on other tires. More would be better. Use a gauge to determine if you have enough tread for safe driving.

Tire Chains. You may find yourself in conditions where you can't drive without chains, even to get to a place of safety. Carry the right number of chains and extra cross links. Make sure they will fit your drive tires. Check the chains for broken hooks, worn or broken cross links, and bent or broken side chains. Learn how to put the chains on before you need to do it in snow and ice.

Lights and Reflectors. Make sure the lights and reflectors are clean. Lights and reflectors are especially important during bad weather. Check from time to time during bad weather to make sure they are clean and working right.

Windows and Mirrors. Remove any ice, snow, etc., from the windshield, windows, and mirrors before starting. Use a windshield scraper, snow brush, and windshield defroster as necessary.

Hand Holds, Steps, and Deck Plates. Remove all ice and snow from hand holds, steps, and deck plates which you must use to enter the cab or to move about the vehicle. This will reduce the danger of slipping.

Radiator Shutters and Winterfront. Remove ice from the radiator shutters. Make sure the winterfront is not closed too tightly. If the shutters freeze shut or the winterfront is closed too much, the engine may overheat and stop.

Exhaust System. Exhaust system leaks are especially dangerous when cab ventilation may be poor (windows rolled up, etc.). Loose connections could permit poisonous carbon monoxide to leak into your vehicle. Carbon monoxide gas will cause you to be sleepy. In large enough amounts it can kill you. Check the exhaust system for loose parts and for sounds and signs of leaks.

Driving

Slippery Surfaces. Drive slowly and smoothly on slippery roads. If it is very slippery, you shouldn't drive at all. Stop at the first safe place.

The following are some safety guidelines:

Start Gently and Slowly. When first starting, get the feel of the road. Don't hurry.

Adjust Turning and Braking to Conditions. Make turns as gentle as possible. Don't brake any harder than necessary, and don't use the engine brake or speed retarder. (They can cause the driving wheels to skid on slippery surfaces.)

Adjust Speed to Conditions. Don't pass slower vehicles unless necessary. Go slow and watch far enough ahead to keep a steady speed. Avoid having to slow down and speed up. Take curves at slower speeds and don't brake while in curves. Be aware that as the temperature rises to the point where ice begins to melt, the road becomes even more slippery. Slow down more.

Adjust Space to Conditions. Don't drive alongside other vehicles. Keep a longer following distance. When you see a traffic jam ahead, slow down or stop to wait for it to clear. Try hard to anticipate stops early and slow down gradually.

Wet Brakes. When driving in heavy rain or deep standing water, your brakes will get wet. Water in the brakes can cause the brakes to be weak, to apply unevenly, or to grab. This can cause lack of braking power, wheel lockups, pulling to one side or the other, and jackknife if you pull a trailer.

Avoid driving through deep puddles or flowing water if possible. If not, you should:

- ✓ Slow down.
- ✓ Place transmission in a low gear.
- ✓ Gently put on the brakes. This presses linings against brake drums or discs and keeps mud, silt, sand, and water from getting in.
- ✓ Increase engine rpm and cross the water while keeping light pressure on the brakes.
- ✓ When out of the water, maintain light pressure on the brakes for a short distance to heat them up and dry them out.
- ✓ Make a test stop when safe to do so. Check behind to make sure no one is following, then apply the brakes to be sure they work right. If not, dry out further as described above. (CAUTION: Do not apply too much brake pressure and accelerator at the same time or you can overheat brake drums and linings.)

2.11 Driving in Very Hot Weather

Vehicle Checks

Do a normal pre-trip inspection, but pay special attention to the following items:

Tires. Check the tire mounting and air pressure. Inspect the tires every two hours or every 100 miles when driving in very hot weather. Air pressure increases with temperature. Do not let air out or the pressure will be too low when the tires cool off. If a tire is too hot to touch, remain stopped until the tire cools off. Otherwise the tire may blow out or catch fire.

Engine Oil. The engine oil helps keep the engine cool, as well as lubricating it. Make sure there is enough engine oil. If you have an oil temperature gauge, make sure the temperature is within the proper range while you are driving.

Engine Coolant. Before starting out, make sure the engine cooling system has enough water and anti-freeze according to the engine manufacturer's directions. (Antifreeze helps the engine under hot conditions as well as cold conditions.) When driving, check the water temperature or coolant temperature gauge from time to time. Make sure that it remains in the normal range. If the gauge goes above the highest safe temperature, there may be something wrong that could lead to engine failure and possibly fire. Stop driving as soon as safely possible and try to find out what is wrong.

Some vehicles have sight glasses, see-through coolant overflow containers or coolant recovery containers. These permit you to check the coolant level while the engine is hot. If the container is not part of the pressurized system, the cap can be safely removed and coolant added even when the engine is at operating temperature.

Never remove the radiator cap or any part of the pressurized system until the system has cooled. Steam and boiling water can spray under pressure and cause severe burns. If you can touch the radiator cap with your bare hand, it is probably cool enough to open.

If coolant has to be added to a system without a recovery tank or overflow tank, follow these steps:

✓ Shut engine off.

✓ Wait until engine has cooled.

✓ Protect hands (use gloves or a thick cloth).

✓ Turn radiator cap slowly to the first stop, which releases the pressure seal.

✓ Step back while pressure is released from the cooling system.

✓ When all pressure has been released, press down on the cap and turn it again to remove it.

✓ Visually check level of coolant and add more coolant if necessary.

✓ Replace cap and turn all the way to the closed position.

Engine Belts. Learn how to check v-belt tightness on your vehicle by pressing on the belts. Loose belts will not turn the water pump and/or fan properly. This will result in overheating. Also, check belts for cracking or other signs of wear.

Hoses. Make sure coolant hoses are in good condition. A broken hose while driving can lead to engine failure and even fire.

Driving

Watch for Bleeding Tar. Tar in the road pavement frequently rises to the surface in very hot weather. Spots where tar “bleeds” to the surface are very slippery.

Go Slow Enough to Prevent Overheating. High speeds create more heat for tires and the engine. In desert conditions the heat may build up to the point where it is dangerous. The heat will increase chances of tire failure or even fire, and engine failure.

Test Your Knowledge

1. You should use low beams whenever you can. True or False?
2. What should you do before you drive if you are drowsy?
3. What effects can wet brakes cause? How can you avoid these problems?
4. You should let air out of hot tires so the pressure goes back to normal. True or False?
5. You can safely remove the radiator cap as long as the engine isn’t overheated. True or False?

These questions may be on the test. If you can’t answer them all, re-read Sections 2.8, 2.9, 2.10 and 2.11.

2.12 Railroad Crossings

Railroad crossings are always dangerous. Every such crossing must be approached with the expectation that a train is coming.

Never Race a Train to a Crossing

Never attempt to race a train to a crossing. It is extremely difficult to judge the speed of an approaching train.

Reduce Speed

Speed must be reduced in accordance with your ability to see approaching trains in any direction, and speed must be held to a point which will permit you to stop short of the tracks in case a stop is necessary.

Don't Expect to Hear a Train

Because of noise in the cab, you cannot expect to hear the train horn until the train is dangerously close to the crossing.

Don't Rely on Signals

You should not rely solely upon the presence of warning signals, gates, or flagmen to warn of the approach of trains.

Double tracks require a double check. Remember that a train on one track may hide a train on the other track. Look both ways before crossing. After one train has cleared a crossing, be sure no other trains are near before starting across the tracks.

Yard areas and grade crossings in cities and towns are just as dangerous as rural grade crossings. Approach them with as much caution.

Stop Requirements

A full stop is required at grade crossings whenever:

✓ The nature of the cargo makes a stop mandatory under state or federal regulations.

✓ Such a stop is otherwise required by law.

Crossing the Tracks

Railroad crossings with steep approaches can cause your unit to hang up on the tracks.

Never permit traffic conditions to trap you in a position where you have to stop on the tracks. Be sure you can get all the way across the tracks before you start across.

Do not shift gears while crossing railroad tracks.

2.13 Mountain Driving

In mountain driving, gravity plays a major role. On any upgrade, gravity slows you down. The steeper the grade, the longer the grade, and/or the heavier the load — the more you will have to use lower gears to climb hills or mountains. In coming down long steep downgrades, gravity causes the speed of your vehicle to increase. You must select an appropriate safe speed, then use a low gear, and use proper braking techniques. You should plan ahead and obtain information about any long steep grades along your planned route of travel. If possible, talk to other drivers who are familiar with the grades to find out what speeds are safe.

You must go slow enough so your brakes can hold you back without getting too hot. If the brakes become too hot, they may start to “fade.” This means you have to apply them harder and harder to get the same stopping power. If you continue to use the brakes hard, they can keep fading until you cannot slow down or stop at all.

Select a “Safe” Speed

Your most important consideration is to select a speed that is not too fast for the:

- ✓ Total weight of the vehicle and cargo.
- ✓ Length of the grade.
- ✓ Steepness of the grade.
- ✓ Road conditions.
- ✓ Weather.

If a speed limit is posted, or there is a sign indicating “Maximum Safe Speed,” never exceed the speed shown. Also, look for and heed warning signs indicating the length and steepness of the grade.

You must use the braking effect of the engine as the principal way of controlling your speed. The braking effect of the engine is greatest when it is near the governed rpms and the transmission is in the lower gears. Save your brakes so you will be able to slow or stop as required by road and traffic conditions.

Be in the Right Gear Before Starting Down the Grade

Shift the transmission to a low gear before starting down the grade. Do not try to downshift after your speed has already built up. You will not be able to shift into a lower gear. You may not even be able to get back into any gear and all engine braking effect will be lost. Forcing an automatic transmission into a lower gear at high speed could damage the transmission and also lead to loss of all engine braking effect.

With older trucks, a rule for choosing gears is to use the same gear going down a hill that you would need to climb the hill. However, new trucks have low friction parts and streamlined shapes for fuel economy. They may also have more powerful engines. This means they can go up hills in higher gears and have less friction and air drag to hold them back going down hills. For that reason, drivers of modern trucks may have to use lower gears going down a hill than would be required going up the hill. You should know what is right for your vehicle.

Brake Fading or Failure

Brakes are designed so brake shoes or pads rub against the brake drum or disks to slow the vehicle. Braking creates heat, but the brakes are designed to take a lot of heat. However, brakes can fade or fail from excessive heat caused by using them too much and not relying on the engine braking effect.

Brake fade is also affected by adjustment. To safely control a vehicle, every brake must do its share of the work. Brakes out of adjustment will stop doing their share before those that are in adjustment. The other brakes can then overheat and fade, and there will not be enough braking available to control the vehicle. Brakes can get out of adjustment quickly, especially when they are used a lot; also, brake linings wear faster when they are hot. Therefore, brake adjustment must be checked frequently.

Proper Braking Technique

Remember: The use of brakes on a long and/or steep downgrade is only a supplement to the braking effect of the engine. Once the vehicle is in the proper low gear, the following is a proper braking technique:

1. Apply the brakes just hard enough to feel a definite slowdown.
2. When your speed has been reduced to approximately five mph below your “safe” speed, release the brakes. (This brake application should last for about three seconds.)
3. When your speed has increased to your “safe” speed, repeat steps 1 and 2.

For example, if your “safe” speed is 40 mph, you would not apply the brakes until your speed reaches 40 mph. You now apply the brakes hard enough to gradually reduce your speed to 35 mph and then release the brakes. Repeat this as often as necessary until you have reached the end of the downgrade.

Escape ramps have been built on many steep mountain downgrades. Escape ramps are made to stop runaway vehicles safely without injuring drivers and passengers. Escape ramps use a long bed of loose soft material to slow a runaway vehicle, sometimes in combination with an upgrade.

Know escape ramp locations on your route. Signs show drivers where ramps are located. Escape ramps save lives, equipment, and cargo. Use them if you lose your brakes.

2.14 Seeing Hazards

Importance of Seeing Hazards

What Is a Hazard? A hazard is any road condition or other road user (driver, bicyclist, pedestrian) that is a possible danger. For example, a car in front of you is headed toward the freeway exit, but his brake lights come on and he begins braking hard. This could mean that the driver is uncertain about taking the off-ramp. He might suddenly return to the highway. This car is a hazard. If the driver of the car cuts in front of you, it is no longer just a hazard; it is an emergency.

Seeing Hazards Lets You Be Prepared. You will have more time to act if you see hazards before they become emergencies. In the example above, you might make a lane change or slow down to prevent a crash if the car suddenly cuts in front of you. Seeing this hazard gives you time to check your mirrors and signal a lane change. Being prepared reduces the danger. A driver who did not see the hazard until the slow car pulled back on the highway in front of him would have to do something very suddenly. Sudden braking or a quick lane change is much more likely to lead to a crash.

Learning to See Hazards. There are often clues that will help you see hazards. The more you drive, the better you can get at seeing hazards. Many of the hazards that you should be aware of will be explained in this section.

Hazardous Roads

Slow down and be careful if you see any of the following road hazards:

Work Zones. When people are working on the road, it is a hazard. There may be narrower lanes, sharp turns, or uneven surfaces. Other drivers are often distracted and drive unsafely. Workers and construction vehicles may get in the way. Drive slowly and carefully near work zones. Use your four-way flashers or brake lights to warn drivers behind you.

Drop Off. Sometimes the pavement drops off sharply near the edge of the road. Driving too near the edge can tilt your vehicle toward the side of the road. This can cause the top of your vehicle to hit roadside objects (signs, tree limbs). Also, it can be hard to steer as you cross the drop off, going off the road, or coming back on.

Foreign Objects. Things that have fallen on the road can be hazards. They can be a danger to your tires and wheel rims. They can damage electrical and brake lines. They can be caught between dual tires and cause severe damage. Some obstacles which appear to be harmless can be very dangerous. For example, cardboard boxes may be empty, but they may also contain some solid or heavy material capable of causing damage. The same is true of paper and cloth sacks. It is important to remain alert for objects of all sorts, so you can see them early enough to avoid them without making sudden, unsafe moves.

Off-ramps/On-ramps. Freeway and turnpike exits can be particularly dangerous for commercial vehicles. Off-ramps and on-ramps often have speed limit signs posted. Remember, these speeds may be safe for automobiles, ***but may not be safe for larger vehicles or heavily loaded vehicles***. Exits which go downhill and turn at the same time can be especially dangerous. The downgrade makes it difficult to reduce speed. Braking and turning at the same time can be a dangerous practice. Make sure you are going slow enough before you get on the curved part of an off-ramp or on-ramp.

Drivers Who Are Hazards

In order to protect yourself and others, you must know when other drivers may do something hazardous. Some clues to this type of hazard are discussed below:

Blocked Vision. People who can't see others are a very dangerous hazard. Be alert for drivers whose vision is blocked. Vans, loaded station wagons, and cars with the rear window blocked are examples. Rental trucks should be watched carefully. Their drivers are often not used to the limited vision they have to the sides and rear of the truck. In winter, vehicles with frosted, ice-covered, or snow-covered windows are hazards.

Vehicles may be partly hidden by blind intersections or alleys. If you can only see the rear or front end of a vehicle but not the driver, then he or she can't see you. Be alert because he/she may back out or enter into your lane. Always be prepared to stop.

Delivery trucks can present a hazard. The driver's vision is often blocked by packages or vehicle doors. Drivers of step vans, postal vehicles, and local delivery vehicles often are in a hurry and may suddenly step out of their vehicle or drive their vehicle into the traffic lane.

Parked vehicles can be hazards, when the people start to get out. Or, they may suddenly start up and drive into your way. Watch for movement inside the vehicle or movement of the vehicle itself that shows people are inside. Watch for brake lights or back-up lights, exhaust, and other clues that a driver is about to move.

Be careful of a stopped bus. Passengers may cross in front of or behind the bus, and they often can't see you.

Pedestrians and bicyclists can also be hazards. Walkers, joggers, and bicyclists may be on the road with their back to the traffic, so they can't see you. Sometimes, they wear portable stereos with headsets, so they can't hear you either. This can be dangerous. On rainy days, pedestrians may not see you because of hats or umbrellas. They may be hurrying to get out of the rain and may not pay attention to the traffic.

Distractions. People who are distracted are hazards. Watch for where they are looking. If they are looking elsewhere, they can't see you. But be alert even when they are looking at you. They may believe that they have the right of way.

Children. Children tend to act quickly without checking traffic. Children playing with one another may not look for traffic and are a serious hazard.

Talkers. Drivers or pedestrians talking to one another may not be paying close attention to the traffic.

Workers. People working on or near the roadway are a hazard clue. The work creates a distraction for other drivers and the workers themselves may not see you.

Ice Cream Truck. Someone selling ice cream is a hazard clue. Children may be nearby and may not see you.

Disabled Vehicle. Drivers changing a tire or fixing an engine often do not pay attention to the danger that roadway traffic is to them. They are often careless. Jacked up wheels or raised hoods are hazard clues.

Accidents. Accidents are particularly hazardous. People involved in the accident may not look for traffic. Passing drivers tend to look at the accident. People often run across the road without looking. Vehicles may slow or stop suddenly.

Shoppers. People in and around shopping areas are often not watching traffic because they are looking for stores or looking into store windows.

Confused Drivers. Confused drivers often change direction suddenly or stop without warning. Confusion is common near freeway or turnpike interchanges and major intersections. Tourists unfamiliar with the area can be very hazardous. Clues to tourists include cartop luggage and out-of-state license plates. Unexpected actions (stopping in the middle of a block, changing lanes for no apparent reason, back-up

lights suddenly going on) are clues to confusion. Hesitation is another clue, including driving very slowly, using brakes often, or stopping in the middle of an intersection. You may also see drivers who are looking at street signs, maps, and house numbers. These drivers may not be paying attention to you.

Slow Drivers. Motorists who fail to maintain normal speed are hazards. Seeing slow moving vehicles early can prevent a crash. Some vehicles, by their nature, are slow and seeing them is a hazard clue (mopeds, farm machinery, construction machinery, tractors, etc.). Some of these will have the “slow moving vehicle” symbol to warn you. This is a red triangle with an orange center. Watch for it.

Drivers signaling a turn may be a hazard. Drivers signaling a turn may slow more than expected or stop. If they are making a tight turn into an alley or driveway, they may go very slow. If they are blocked by pedestrians or other vehicles, they may have to stop on the roadway. Vehicles turning left may have to stop for oncoming vehicles.

Drivers in a Hurry. Drivers may feel your commercial vehicle is preventing them from getting where they want to go on time. Such drivers may pass you without a safe gap in the oncoming traffic, cutting too close in front of you. Drivers entering the road may pull in front of you to avoid being stuck behind you, causing you to brake. Be aware of this and watch for drivers who are in a hurry.

Impaired Drivers. Drivers who are sleepy, have had too much to drink, are on drugs, or who are ill are hazards. Some clues to these drivers are:

- ✓ Weaving across the road or drifting from one side to another.
- ✓ Leaving the road (dropping right wheels onto the shoulder or bumping across a curb in a turn).
- ✓ Stopping at the wrong time (stopping at a green light or waiting too long at a stop).
- ✓ Open window in cold weather.
- ✓ Speeds up or slows down suddenly, driving too fast or too slow.

Be alert for drunk drivers and sleepy drivers late at night.

Driver Body Movement as a Clue. Drivers look in the direction they are going to turn. You may sometimes get a clue from a driver’s head and body movements that the driver may be going to make a turn even though the turn signals aren’t on. Drivers making over-the-shoulder checks may be going to change lanes. These clues are most easily seen in motorcyclists and bicyclists. Watch other road users and try to tell whether they might do something hazardous.

Conflicts. You are in conflict when you have to change speed and/or direction to avoid hitting someone. Conflicts occur at intersections where vehicles meet, at merges (such as turnpike on-ramps) and where there are needed lane changes (such as the end of a lane, forcing a move to another lane of traffic). Other situations include slow moving or stalled traffic in a traffic lane and accident scenes. Watch for other drivers who are in conflict because they are a hazard to you. When they react to this conflict, they may do something that will put them in conflict with you.

Always Have a Plan

You should always be looking for hazards. Continue to learn to see hazards on the road. However, don’t forget why you are looking for the hazards: they may turn into ***emergencies***. You look for the hazards in order to have time to ***plan a way out of any emergency***. When you see a hazard, think about the emergencies that could develop and figure out what you would do. Always be prepared to take action based on your plans. In this way, you will be a prepared, defensive driver who will improve not only your own safety but the safety of all road users.

Test Your Knowledge

1. What factors determine your selection of a “safe” speed when going down a long, steep downgrade?
2. Why should you be in the proper gear before starting down a hill?
3. Describe the proper braking technique when going down a long, steep downgrade.
4. What is a hazard?
5. Why make emergency plans when you see a hazard?

These questions may be on the test. If you can’t answer them all, re-read Sections 2.12, 2.13, and 2.14.

2.15 Emergencies

Traffic emergencies occur when two vehicles are about to collide. ***Vehicle*** emergencies occur when tires, brakes, or other critical parts fail. Following the safety practices in this manual can help prevent emergencies. But if an emergency does happen, your chances of avoiding a crash depend upon how well you take action. Actions you can take are discussed below.

Steering to Avoid a Crash

Stopping is not always the safest thing to do in an emergency. When you don’t have enough room to stop, you may have to steer away from what’s ahead. Remember, you can almost always turn to miss an obstacle more quickly than you can stop. (However, top-heavy vehicles and tractors with multiple trailers may flip over.

Keep Both Hand on the Steering Wheel. In order to turn quickly, you must have a firm grip on the steering wheel with both hands. The best way to have both hands on the wheel, if there is an emergency, is to keep them there all the time.

How to Turn Quickly and Safely. A quick turn can be made safely, if it’s done the right way. Here are some points that safe drivers use:

✓ ***Do not*** apply the brake while you are turning. It’s very easy to lock your wheels while turning. If that happens, you may skid out of control.

✓ ***Do not*** turn any more than needed to clear whatever is in your way. The more sharply you turn, the greater the chances of a skid or rollover.

✓ Be prepared to “countersteer,” that is, to turn the wheel back in the other direction, once you’ve passed whatever was in your path. Unless you are prepared to countersteer, you won’t be able to do it quickly enough. You should think of emergency steering and countersteering as two parts of one driving action.

Where to Steer. If an oncoming driver has drifted into your lane, a move to your right is best. If that driver realizes what has happened, the natural response will be to return to his or her own lane.

If something is blocking your path, the best direction to steer will depend on the situation.

✓ If you have been using your mirrors, you’ll know which lane is empty and can be safely used.

✓ If the shoulder is clear, going right may be best. No one is likely to be driving on the shoulder but someone may be passing you on the left. You will know if you have been using your mirrors.

✓ If you are blocked on both sides, a move to the right may be best. At least you won’t force anyone into an opposing traffic lane and a possible head-on collision.

Leaving the Road. In some emergencies, you may have to drive off the road. It may be less risky than facing a collision with another vehicle.

Most shoulders are strong enough to support the weight of a large vehicle and, therefore, offer an available escape route. Here are some guidelines, if you do leave the road.

Avoid Braking. If possible, avoid using the brakes until your speed has dropped to about 20 mph. Then brake very gently to avoid skidding on a loose surface.

Keep One Set of Wheels on the Pavement If Possible. This helps to maintain control.

Stay on the Shoulder. If the shoulder is clear, stay on it until your vehicle has come to a stop. Signal and check your mirrors before pulling back onto the road.

Returning to the Road. If you are forced to return to the road before you can stop, use the following procedure:

- ✓ Hold the wheel tightly and turn sharply enough to get right back on the road safely. Don't try to edge gradually back on the road. If you do, your tires might grab unexpectedly and you could lose control.
- ✓ When both front tires are on the paved surface, ***countersteer*** immediately. The two turns should be made as a single "steer-countersteer" move.

How to Stop Quickly and Safely

If somebody suddenly pulls out in front of you, your natural response is to hit the brakes. This is a good response if there's enough distance to stop and you use the brakes correctly.

You should brake in a way that will keep your vehicle in a straight line and allow you to turn if it becomes necessary. You can use the "controlled braking" method or the "stab braking" method.

Controlled Braking. With this method, you apply the brakes as hard as you can ***without*** locking the wheels. Keep steering wheel movements very small while doing this. If you need to make a larger steering adjustment or if the wheels lock, release the brakes. Re-apply the brakes as soon as you can.

Stab Braking.

- ✓ Apply your brakes all the way.
- ✓ Release brakes when wheels lock up.
- ✓ As soon as the wheels start rolling, apply the brakes fully again. (It can take up to one second for the wheels to start rolling after you release the brakes. If you re-apply the brakes before the wheels start rolling, the vehicle won't straighten out.)

Don't Jam on the Brakes. Emergency braking does not mean pushing down on the brake pedal as hard as you can. That will only keep the wheels locked up and cause a skid. If the wheels are skidding, you cannot control the vehicle.

Note: If you drive a vehicle with anti-lock brakes, you should read and follow the directions found in the Owner's Manual for stopping quickly.

Brake Failure

Brakes kept in good condition rarely fail. Most ***hydraulic*** brake failures occur for one of two reasons: (Air brakes are discussed in Section 5.)

- ✓ Loss of hydraulic pressure.
- ✓ Brake fade on long hills.

Loss of Hydraulic Pressure. When the system won't build up pressure, the brake pedal will feel spongy or go to the floor. Here are some things you can do:

Downshift. Putting the vehicle into a lower gear will help to slow the vehicle.

Pump the Brakes. Sometimes pumping the brake pedal will generate enough hydraulic pressure to stop the vehicle.

Use the Parking Brake. The parking or emergency brake is separate from the hydraulic brake system. Therefore, it can be used to slow the vehicle. However, be sure to press the release button or pull the release lever at the same time you use the emergency brake so you can adjust the brake pressure and keep the wheels from locking up.

Find an Escape Route. While slowing the vehicle, look for an escape route — an open field, side street, or escape ramp. Turning uphill is a good way to slow and stop the vehicle. Make sure the vehicle does not start rolling backward after you stop. Put it in low gear, apply the parking brake, and, if necessary, roll back into some obstacle that will stop the vehicle.

Brake Failure on Downgrades. Going slow enough and braking properly will almost always prevent brake failure on long downgrades. Once the brakes have failed, however, you are going to have to look outside your vehicle for something to stop it.

Your best hope is an ***escape ramp***. If there is one, there'll be signs telling you about it. Use it. Ramps are usually located a few miles from the top of the downgrade. Every year, hundreds of drivers avoid injury to themselves or damage to their vehicles by using escape ramps. Some escape ramps use soft gravel that resists the motion of the vehicle and brings it to a stop. Others turn uphill, using the hill to stop the vehicle and soft gravel to hold it in place.

Any driver who loses brakes going downhill should use an escape ramp if it's available. If you don't use it, your chances of having a serious crash may be much greater.

If no escape ramp is available, take the least hazardous escape route you can — such as an open field or a side road that flattens out or turns uphill. Make the move as soon as you know your brakes don't work. The longer you wait, the faster the vehicle will go and the harder it will be to stop.

Tire Failure

Recognize Tire Failure. Quickly knowing that you have a tire failure will let you have more time to react. Having just a few seconds to remember what it is you're supposed to do can help you. The major signs of tire failure are:

Sound. The loud "bang" of a blowout is an easily recognized sign. Because it can take a few seconds for your vehicle to react, you might think it was some other vehicle. But any time you hear a tire blow, you'd be safest to assume it was yours.

Vibration. If the vehicle thumps or vibrates heavily, it may be a sign that one of the tires has gone flat. With a rear tire, that may be the only sign you get.

Feel. If the steering feels "heavy," it is probably a sign that one of the front tires has failed. Sometimes, failure of a rear tire will cause the vehicle to slide back and forth or "fishtail". However, dual rear tires usually prevent this.

Any of these signs is a warning of possible tire failure. You should do the following things:

Hold the Steering Wheel Firmly. If a front tire fails, it can twist the steering wheel out of your hand. The only way to prevent this is to keep a firm grip on the steering wheel with both hands at all times.

Stay Off the Brake. It's natural to want to brake in an emergency. However, braking when a tire has failed could cause loss of control. Unless you're about to run into something, stay off the brake until the vehicle has slowed down. Then brake very gently, pull off the road, and stop.

Check the Tires. After you've come to a stop, get out and check all the tires. Do this even if the vehicle seems to be handling all right. If one of your dual tires fail, the only way you may know it is by getting out and looking at it.

2.16 Skid Control and Recovery

A skid happens whenever the tires lose their grip on the road. This is caused in one of four ways:

Over-braking. Braking too hard and locking up the wheels. Skids also can occur when using the speed retarder when the road is slippery.

Over-steering. Turning the wheels more sharply than the vehicle can turn.

Over-acceleration. Supplying too much power to the drive wheels, causing them to spin.

Driving Too Fast. Most serious skids result from driving too fast for road conditions. Drivers who adjust their driving to conditions don't over-accelerate and don't have to over-brake or over-steer from too much speed.

Drive Wheel Skids

By far the most common skid is one in which the rear wheels lose traction through excessive braking or acceleration. Skids caused by acceleration usually happen on ice or snow. They can be easily stopped by taking your foot off the accelerator. (If it is very slippery, push the clutch in. Otherwise, the engine can keep the wheels from rolling freely and regaining traction.)

Rear wheel braking skids occur when the rear drive wheels lock. Because locked wheels have less traction than rolling wheels, the rear wheels usually slide sideways in an attempt to "catch up" with the front wheels. In a bus or straight truck, the vehicle will slide sideways in a "spin out." With vehicles towing trailers, a drive-wheel skid can let the trailer push the towing vehicle sideways, causing a sudden jackknife. (Figure 2-14)

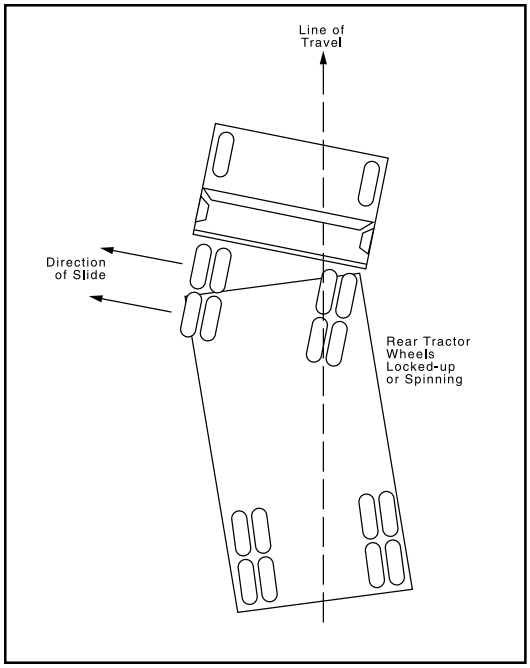

Figure 2-14

Tractor Jackknife

Correcting a Drive Wheel Braking Skid

Do the following to correct a drive wheel braking skid:

Stop Braking. This will let the rear wheels roll again, and keep the rear wheels from sliding any further. If on ice, push in the clutch to let the wheels turn freely.

Turn Quickly. When a vehicle begins to slide sideways, **quickly** steer in the direction you want the vehicle to go — down the road. You must turn the wheel quickly.

Countersteer. As a vehicle turns back on course, it has a tendency to keep right on turning. Unless you turn the steering wheel quickly the other way, you may find yourself skidding in the opposite direction.

Learning to stay off the brake, turn the steering wheel quickly, push in the clutch, and counter-steer in a skid takes a lot of practice. The best place to get this practice is on a large driving range or "skid pad."

Front Wheel Skids

Most front wheel skids are caused by driving too fast for conditions. Other causes are: lack of tread on the front tires, and cargo loaded so not enough weight is on the front axle. In a front wheel skid, the front end tends to go in a straight line regardless of how much you turn the steering wheel. On a very slippery surface, you may not be able to steer around a curve or turn.

When a front wheel skid occurs, the only way to stop the skid is to let the vehicle slow down. Stop turning and/or braking so hard. Slow down as quickly as possible without skidding.

Test Your Knowledge

1. Stopping is not always the safest thing to do in an emergency. True or False?
2. What are some advantages of going right instead of left around an obstacle?
3. What is an “escape ramp”?
4. If a tire blows out, you should put the brakes on hard to stop quickly. True or False?

These questions may be on the test. If you can’t answer them all, re-read Sections 2.15 and 2.16.

2.17 Accident Procedures

When you’re in an accident and not seriously hurt, you need to act to prevent further damage or injury. The basic steps to be taken at any accident are to:

✓ Protect the area.

✓ Notify authorities.

✓ Care for the injured.

Protect the Area

The first thing to do at an accident scene is to keep another accident from happening at the same spot. To protect the accident area:

✓ If your vehicle is involved in the accident, try to get it to the side of the road. This will help prevent another accident and allow traffic to move.

✓ If you’re stopping to help, park away from the accident. The area immediately around the accident will be needed for emergency vehicles.

✓ Put on your flashers.

✓ Set out reflective triangles to warn other traffic. Make sure they can be seen by other drivers in time for them to avoid the accident.

Notify Authorities

If you have a CB, put out a call over the emergency channel before you get out of your vehicle. If not, wait until after the accident scene has been properly protected, then phone or send someone to phone the police. Try to determine where you are so you can give the exact location.

Care for the Injured

If a qualified person is at the accident and helping the injured, stay out of the way unless asked to assist. Otherwise, do the best you can to help any injured parties. Here are some simple steps to follow in giving assistance:

✓ Don’t move a severely injured person unless the danger of fire or passing traffic makes it necessary.

✓ Stop heavy bleeding by applying direct pressure to the wound.

✓ Keep the injured person warm.

2.18 Fires

Truck fires can cause damage and injury. Learn the causes of fires and how to prevent them. Know what to do to extinguish fires.

Causes of Fires

The following are some causes of vehicle fires:

After Accidents. Spilled fuel, improper use of flares.

Tires. Under-inflated tires and duals that touch.

Electrical System. Short circuits due to damaged insulation, loose connections.

Fuel. Driver smoking, improper fueling, loose fuel connections.

Cargo. Flammable cargo, improperly sealed or loaded, poor ventilation.

Fire Prevention

Pay attention to the following:

Pre-trip Inspection. Make a complete inspection of the electrical, fuel, and exhaust systems, tires, and cargo. Be sure to check that the fire extinguisher is charged.

En Route Inspection. Check the tires, wheels, and truck body for signs of heat whenever you stop during a trip.

Follow Safe Procedures. Follow correct safety procedures for fueling the vehicle, using brakes, handling flares, and other activities that can cause a fire.

Monitoring. Check the instruments and gauges often for signs of overheating and use the mirrors to look for signs of smoke from tires or the vehicle.

Caution. Use normal caution in handling anything flammable.

Fighting Fires

Knowing how to fight fires is important. Fires have been made worse by drivers who didn't know what to do. Know how the fire extinguisher works. Study the instructions printed on the extinguisher before you need it. Here are some procedures to follow in case of fire:

Pull Off the Road. The first step is to get the vehicle off the road and stopped. In doing so:

- ✓ Park in an open area, away from buildings, trees, brush, other vehicles, or anything that might catch fire.
- ✓ Don't pull into a service station!
- ✓ Notify emergency services of your problem and your location.

Keep the Fire From Spreading. Before trying to put out the fire, make sure that it doesn't spread any further.

- ✓ With an ***engine*** fire, turn off the engine as soon as you can. Don't open the hood if you can avoid it. Shoot extinguishers through louvers, radiator, or from the underside of the vehicle.
- ✓ For a ***cargo*** fire in a van or box trailer, keep the doors shut, especially if your cargo contains hazardous materials. Opening the van doors will supply the fire with oxygen and can cause it to burn very fast.

Use the Right Fire Extinguisher.

- ✓ The B:C type fire extinguisher is designed to work on electrical fires and burning liquids. The A:B:C type is designed to work on burning wood, paper, and cloth as well.
- ✓ Water can be used on wood, paper, or cloth, but don't use water on an electrical fire (you could get shocked) or a gasoline fire (it will just spread the flames).
- ✓ A burning tire must be cooled. Lots of water may be required.
- ✓ If you're not sure what to use, especially on a hazardous materials fire, wait for qualified firefighters.

Extinguish the Fire. Here are some rules to follow in putting out a fire.

- ✓ Only try to extinguish a fire if you know what you are doing and it is safe to do so.
- ✓ When using the extinguisher, stay as far away from the fire as possible.
- ✓ Aim at the source or base of the fire, not up in the flames.
- ✓ Position yourself upwind. Let the wind carry the extinguisher to the fire rather than carrying the flames to you.
- ✓ Continue until whatever was burning has been cooled. Absence of smoke or flame does not mean the fire is completely out or cannot restart.

Test Your Knowledge

1. What are some things to do at an accident scene to prevent another accident?
2. Name two causes of tire fires.
3. The B:C extinguisher is NOT designed for what type of fires?
4. When using your extinguisher, should you get as close as possible to the fire?
5. Name some causes of vehicle fires.

These questions may be on the test. If you can't answer them all, re-read Sections 2.17 and 2.18.

2.19 Staying Alert and Fit to Drive

Driving a vehicle for long hours is tiring. Even the best of drivers will become less alert. However, there are things that good drivers do to help stay alert and safe. Here are a few suggestions:

Be Ready to Drive

Get Enough Sleep. Leaving on a long trip when you're already tired is dangerous. If you have a long trip scheduled, make sure that you get enough sleep before you go. Most people require 7-8 hours of sleep every 24 hours.

Schedule Trips Safely. Your body gets used to sleeping during certain hours. If you are driving during those hours, you will be less alert. If possible, try to schedule trips for the hours you are normally awake. Many heavy motor vehicle accidents occur between midnight and 6 a.m. Tired drivers can easily fall asleep at these times, especially if they don't regularly drive at those hours. Trying to push on and finish a long trip at these times can be very dangerous.

Avoid Medication. Many medicines can make you sleepy. Those that do have a label warning against operating vehicles or machinery. The most common medicine of this type is an ordinary cold pill. If you have to drive with a cold, you are better off suffering from the cold than from the effects of the medicine.

Keep Cool. A hot, poorly ventilated cab can make you sleepy. Keep the window or vent cracked or use the air conditioner, if you have one.

Take Breaks. Short breaks can keep you alert. But the time to take them is ***before*** you feel really drowsy or tired. Stop often. Walk around and inspect your vehicle. It may help to do some physical exercises.

When You Do Become Sleepy

When you are sleepy, trying to "push on" is far more dangerous than most drivers think. It is a major cause of fatal accidents. Here are some important rules to follow:

Stop to Sleep. When your body needs sleep, sleep is the only thing that will work. If you have to make a stop anyway, make it whenever you feel the first signs of sleepiness, even if it is earlier than you planned. By getting up a little earlier the next day, you can keep on schedule without the danger of driving while you are not alert.

Take a Nap. If you can't stop for the night, at least pull off at a safe place, such as a rest area or truck stop, and take a nap. A nap as short as half an hour will do more to overcome fatigue than a half-hour coffee stop.

Avoid Drugs. There are no drugs that can overcome being tired. While they may keep you awake for a while, they won't make you alert. And eventually, you'll be even more tired than if you hadn't taken them at all. Sleep is the only thing that can overcome fatigue.

Alcohol and Driving

Drinking alcohol and then driving is a very serious problem. People who drink alcohol are involved in traffic accidents resulting in over 20,000 deaths every year. You should know:

✓ How alcohol works in the human body.

✓ How it affects driving.

✓ Laws regarding drinking and driving.

✓ Legal, financial, and safety risks of drinking and driving.

The Truth About Alcohol. There are many dangerous ideas about the use of alcohol. The driver who believes in these wrong ideas will be more likely to get into trouble. Here are some examples:

THE MYTH	THE TRUTH
Alcohol increases your ability to drive.	***Alcohol is a drug that will make you less alert and reduces your ability to drive safely.***
Some people can drink a lot and not be affected.	***Everyone who drinks is affected by alcohol.***
If you eat a lot first, you won't get drunk.	***Food will not keep you from getting drunk.***
Coffee and a little fresh air will help a drinker sober up.	***Only time will help a drinker sober up — other methods just don't work.***
Stick with beer — it's not as strong as wine or whiskey.	***A few beers are the same as a few shots. of whiskey or a few glasses of wine.***

What Is a Drink? It is the alcohol in drinks that affects human performance. It doesn't make any difference whether that alcohol comes from "a couple of beers" or from two glasses of wine or two shots of hard liquor.

All of the following drinks **contain the same amount of alcohol**:

✓ A 12-ounce glass of 5% beer.

- ✓ A 5-ounce glass of 12% wine.
- ✓ A 1 1/2-ounce shot of 80 proof liquor.

How Alcohol Works. Alcohol goes directly from the stomach into the blood stream. A drinker can control the amount of alcohol which he or she takes in, by having fewer drinks or none. However, the drinker cannot control how fast the body gets rid of alcohol. If you have drinks faster than the body can get rid of them, you will have more alcohol in your body and your driving will be affected. The amount of alcohol in your body is commonly measured by the Blood Alcohol Concentration (BAC).

What Determines Blood Alcohol Concentration. BAC is determined by the amount of alcohol you drink (more alcohol means higher BAC), how fast you drink (faster drinking means higher BAC), and your weight (a small person doesn't have to drink as much to reach the same BAC).

Alcohol and the Brain. Alcohol affects more and more of the brain as BAC builds up. The first part of the brain affected controls judgment and self-control. One of the bad things about this is it can keep drinkers from knowing they are getting drunk. And, of course, good judgment and self-control are absolutely necessary for safe driving.

As blood alcohol concentration continues to build up, muscle control, vision, and coordination are affected more and more. Eventually, a person will pass out.

How Alcohol Affects Driving. All drivers are affected by drinking alcohol. Alcohol affects judgment, vision, coordination, and reaction time. It causes serious driving errors, such as:

- ✓ Increased reaction time to hazards.
- ✓ Driving too fast or too slow.
- ✓ Driving in the wrong lane.
- ✓ Running over the curb.
- ✓ Weaving.
- ✓ Straddling lanes.
- ✓ Quick, jerky starts.
- ✓ Not signaling, failure to use lights.
- ✓ Running stop signs and red lights.
- ✓ Improper passing.

These effects mean increased chances of a crash and chances of losing your driver's license. Accident statistics show that the chance of a crash is much greater for drivers who have been drinking than for drivers who have not.

Other Drugs

Besides alcohol, other legal and illegal drugs are being used more often. Laws prohibit possession or use of many drugs while on duty. They prohibit being under the influence of any "controlled substance"; an amphetamine (including "pep pills" and "bennies"), narcotics, or any other substance which can make the driver unsafe. This could include a variety of prescription and over-the-counter drugs (cold medicines) which may make the driver drowsy or otherwise affect safe driving ability. However, possession and use of a drug given to a driver by a doctor is permitted if the doctor informs the driver that it will not affect safe driving ability.

Pay attention to warning labels of legitimate drugs and medicines and to doctor's orders regarding possible effects. Stay away from illegal drugs. Don't use any drug that hides fatigue — the only cure for fatigue is rest. Alcohol can make the effects of other drugs much worse. The safest rule is don't mix drugs with driving at all.

Use of drugs can lead to traffic accidents resulting in death, injury, and property damage. Furthermore, it can lead to arrest, fines, and jail sentences. It can also mean the end of a person's driving career.

Illness

Once in a while, you may become so ill that you cannot operate a motor vehicle safely. If this happens to you, you must not drive. However, in case of an emergency you may drive to the nearest place where you can safely stop.

2.20 Hazardous Materials Rules For All Commercial Drivers

All drivers should know something about hazardous materials. You must be able to recognize hazardous cargo, and you must know whether or not you can haul it without having a hazardous materials endorsement to your CDL license.

What Are Hazardous Materials?

Hazardous materials are products that pose a risk to health, safety, and property during transportation. Figure 2-15 is the hazardous materials table found in the federal rules. This table lists the nine different hazard classes.

Class	Division	Name of Class or Division	Example
1	1.1 1.2 1.3 1.4 1.5 1.6	Mass Explosives Projection Hazards Mass Fire Hazards Minor Hazards Very Insensitive Extremely Insensitive	Dynamite Flares Display Fireworks Ammunition Blasting Agents Explosive Devices
2	2.1 2.2 2.3	Flammable Gases Non-Flammable Gases Poisonous/Toxic Gases	Propane Helium Fluorine, Compressed
3	—	Flammable Liquids	Gasoline
4	4.1 4.2 4.3	Flammable Solids Spontaneously Combustible Spontaneously Combustible When Wet	Ammonium Picrate, Wetted White Phosphorus Sodium
5	5.1 5.2	Oxidizers Organic Peroxides	Ammonium Nitrate Methyl Ethyl Ketone Peroxide
6	6.1 6.2	Poison (Toxic Material) Infectious Substances	Potassium Cyanide Anthrax Virus
7	—	Radioactive	Uranium
8	—	Corrosives	Battery Fluid
9	—	Miscellaneous Hazardous Materials	Polychlorinated Biphenyls (PCB)
None	—	ORM-D (Other Regulated Material–Domestic)	Food Flavorings, Medicines
None	—	Combustible Liquids	Fuel Oil

Figure 2-15

Hazardous Materials Hazard Class/Division Table

Why Are There Rules?

You must follow the rules about transporting hazardous materials. The intent of the rules is to:

✓ Contain the product.

✓ Communicate the risk.

✓ Ensure safe drivers and equipment.

To Contain the Product. Many hazardous products can injure or kill on contact. To protect drivers and others from contact, the rules tell shippers how to package safely. Similar rules tell drivers how to load, transport, and unload bulk tanks. These are containment rules.

To Communicate the Risk. The shipper uses a shipping paper and package labels to warn dockworkers and drivers of the risk. (Shipping orders, bills of lading, and manifests are all examples of shipping papers.)

The shipping paper describes the hazardous materials being transported. Shippers put diamond-shaped hazard warning labels on most hazardous materials packages. These labels inform others of the hazard. If the diamond label won't fit on the container, shippers put the label on a tag. For example, compressed gas cylinders that will not hold a label will have tags or decals. Labels look like the examples shown in Figure 2-16.

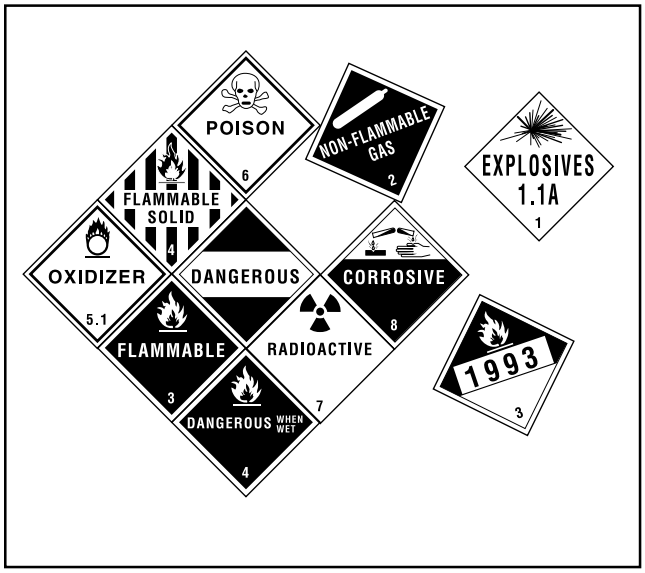

Figure 2-16

Examples of Labels

After an accident or hazardous material spill or leak, you may be injured and unable to communicate the hazards of the materials you are transporting. Firefighters and police can prevent or reduce the amount of damage or injury at the scene if they know what hazardous materials are being carried. Your life, and the lives of others, may depend on quickly locating the hazardous materials shipping papers. For that reason, you must tab shipping papers related to hazardous materials or keep them on top of other shipping papers. You must also keep shipping papers:

✓ In a pouch on the driver's door, or

✓ In clear view within reach while driving, or

✓ On the driver's seat when out of the vehicle.

Lists of Regulated Products

Placards are used to warn others of hazardous materials. Placards are signs put on the outside of a vehicle which identify the hazard class of the cargo. A placarded vehicle must have at least four identical placards. They are put on the front, rear, and both sides (See Figure 9-3). Placards must be readable from all four directions. They are 10 3/4 inches square, turned upright on a point, in a diamond shape. Cargo tanks and other bulk packaging display the identification number of their contents on placards or orange panels.

Not all vehicles carrying hazardous materials need to have placards. The rules about placards are given in Section 9 of this manual. You can drive a vehicle that carries hazardous materials if it does not require placards. If it requires placards, you must not drive it unless your driver license has the hazardous materials endorsement.

To Ensure Safe Drivers and Equipment. The rules require all drivers of placarded vehicles to learn how to safely load and transport hazardous products. They must have a commercial driver license with the hazardous materials endorsement.

To get the required endorsement you must pass a written test on material found in Section 9 of this manual. You will also need a tank endorsement if you transport hazardous products in a cargo tank on a truck larger than 26,000 pounds gross vehicle weight rating.

Drivers who need the hazardous materials endorsement must learn the placard rules. If you do not know if your vehicle needs placards, ask your employer. ***Never drive a vehicle needing placards unless you have a hazardous materials endorsement.*** To do so is a crime. When stopped, you will be cited and you will not be allowed to drive your truck further. It will cost you time and money. A failure to placard when needed will risk your life and others if you have an accident. Emergency help will not know of your hazardous cargo.

Hazardous materials drivers must also know which products they can load together, and which they cannot. These rules are also in Section 9. Before loading a truck with more than one type of product, you must know if it is safe to load them together. If you do not know, ask your employer.

Test Your Knowledge

1. Common medicines for colds can make you sleepy. True or False?
2. What should you do if you do become sleepy while driving?
3. Coffee and a little fresh air will help a drinker sober up. True or False?
4. What is a hazardous materials placard?
5. Why are placards used?

These questions may be on the test. If you can't answer them all, re-read Sections 2.19 and 2.20.

Section 3: Transporting Cargo Safely
For all commercial drivers

This Section Covers

- ✓ Inspecting Cargo
- ✓ Cargo Weight and Balance
- ✓ Securing Cargo
- ✓ Liquids in Bulk
- ✓ Other Cargo Needing Care

This section tells you about hauling cargo safely. You must understand basic cargo safety rules to get a CDL.

If you load cargo wrong or do not secure it, it can be a danger to others and yourself. Loose cargo that falls off a vehicle can cause traffic problems and others could be hurt or killed. Loose cargo could hurt or kill you during a quick stop or crash. Your vehicle could be damaged by an overload. Steering could be affected by how a vehicle is loaded, making it more difficult to control the vehicle.

Whether or not you load and secure the cargo yourself, you are responsible for:

- ✓ Inspecting your cargo.
- ✓ Recognizing overloads and poorly balanced weight.
- ✓ Knowing your cargo is properly secured.

These are discussed below.

If you intend to carry hazardous materials that require placards on your vehicle, you will also have to have a hazardous materials endorsement. Section 9 of this manual has the information you need to pass the hazardous materials test.

3.1 Inspecting Cargo

As part of your pre-trip inspection, make sure the truck is not overloaded and the cargo is balanced and secured properly.

Before Starting

Inspect the cargo and its securing devices again within 25 miles after beginning a trip. Make any adjustments needed. Check the cargo and securing devices as often as necessary during a trip to keep the load secure. A good habit is to inspect again:

Every 3 Hours/150 Miles

- ✓ After you have driven for 3 hours or 150 miles.

After Every Break

- ✓ After every break you take during driving.

Federal, state, and local regulations for commercial vehicle weight, securing cargo, covering loads, and where you can drive large vehicles vary from place to place. Know the rules where you will be driving.

3.2 Weight and Balance

You are responsible for not being overloaded. Here are some definitions of weight you should know:

Definitions You Should Know

Gross Vehicle Weight (GVW). The total weight of a single vehicle plus its load.

Gross Combination Weight (GCW). The total weight of a powered unit plus trailer(s) plus the cargo.

Gross Vehicle Weight Rating (GVWR). The maximum GVW specified by the manufacturer for a single vehicle plus its load.

Gross Combination Weight Rating (GCWR). The maximum GCW specified by the manufacturer for a specific combination of vehicles plus its load.

Axle Weight. The weight transmitted to the ground by one axle or one set of axles.

Tire Load. The maximum safe weight a tire can carry at a specified pressure. This rating is stated on the side of each tire.

Suspension Systems. Suspension systems have a manufacturer's weight capacity rating.

Coupling Device Capacity. Coupling devices are rated for the maximum weight they can pull and/or carry.

Legal Weight Limits

You must keep weights within legal limits. States have maximums for GVWs, GCWs and axle weights. Often, maximum axle weights are set by a bridge formula. A bridge formula permits less maximum axle weight for axles that are closer together. This is to prevent overloading bridges and roadways.

Overloading can have bad effects on steering, braking, and speed control. Overloaded trucks have to go very slow on upgrades. Worse, they may gain too much speed on downgrades. Stopping distance increases. Brakes can fail when forced to work too hard.

During bad weather or in mountains, it may not be safe to operate at legal maximum weights. Take this into account before driving.

Don't Be Top-heavy

The height of a vehicle's center of gravity is very important for safe handling. A high center of gravity (cargo piled up high or heavy cargo on top) means you are more likely to tip over. It is most dangerous in curves or if you have to swerve to avoid a hazard. It is very important to distribute the cargo so it is as low as possible. Put the heaviest parts of the cargo under the lightest parts.

Balance the Weight

Poor weight balance can make vehicle handling unsafe. Too much weight on the steering axle can cause hard steering. It can damage the steering axle and tires. Underloaded front axles (caused by shifting weight too far to the rear) can make the steering axle weight too light to steer safely. Too little weight on the driving axles can cause poor traction. The drive wheels may spin easily. During bad weather, the truck may not be able to keep going. Weight that is loaded so there is a high center of gravity causes greater chance of rollover. On flat bed vehicles, there is also a greater chance that the load will shift to the side or fall off. Figure 3-1 shows examples of the right and wrong way to balance cargo weight.

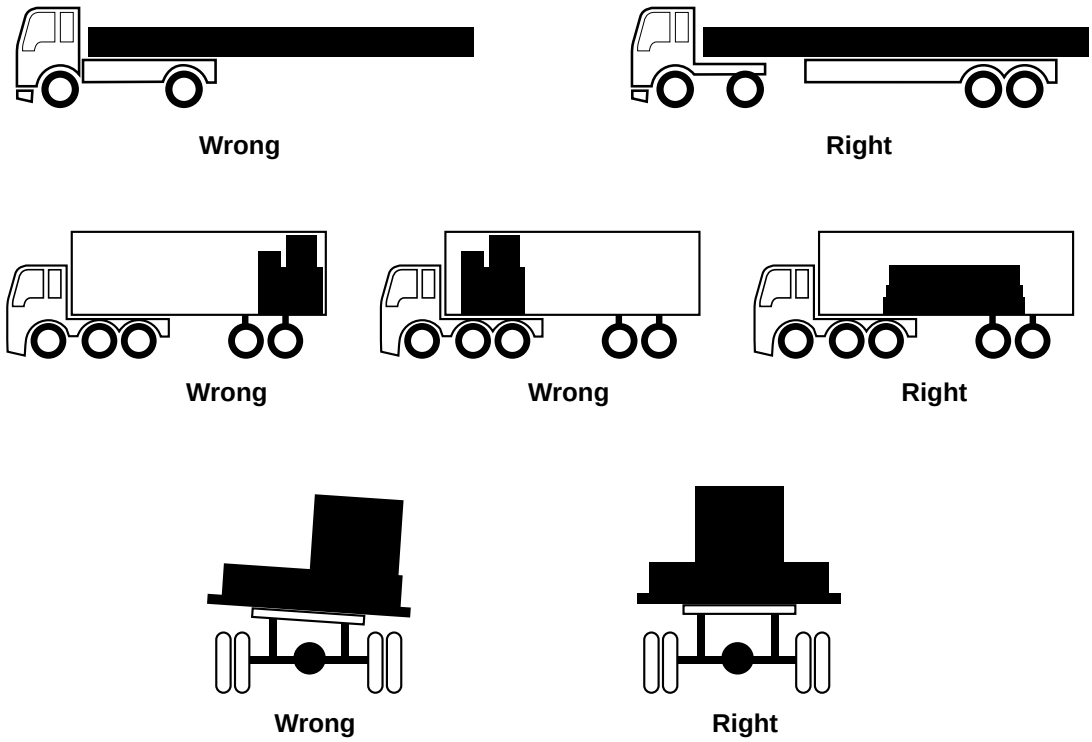

Figure 3-1

Always load cargo the right way!

Test Your Knowledge

1. For what three things related to cargo are drivers responsible?
2. How often must you stop while on the road to check your cargo?
3. How is **Gross Combination Weight Rating** different from **Gross Combination Weight?**
4. Name two situations where legal maximum weights may not be safe.
5. What can happen if you don't have enough weight on the front axle?

These questions may be on the test. If you can't answer them all, re-read Sections 3.1 and 3.2.

3.3 Securing Cargo

Blocking and Bracing

Blocking is used in the front, back, and/or sides of a piece of cargo to keep it from sliding. Blocking is shaped to fit snugly against cargo. It is secured to the cargo deck to prevent cargo movement. ***Bracing*** is also used to prevent movement of cargo. Bracing goes from the upper part of the cargo to the floor and/or walls of the cargo compartment.

Cargo Tiedown

On flatbed trailers or trailers without sides, cargo must be secured to keep it from shifting or falling off. In closed vans, tiedowns can also be important to prevent cargo shifting that may affect the handling of the vehicle. Tiedowns must be of the proper type and proper strength. The combined strength of all cargo tiedowns must be strong enough to lift one and one-half times the weight of the piece of cargo tied down. Proper tiedown equipment must be used, including ropes, straps, chains, and tensioning devices (winches, ratchets, clinching components). Tiedowns must be attached to the vehicle correctly (hook, bolt, rails, rings).

Cargo should have at least one tiedown for each ten feet of cargo. Make sure you have enough tiedowns to meet this need. No matter how small the cargo, it should have at least two tiedowns holding it.

There are special requirements for securing various heavy pieces of metal. Find out what they are if you are to carry such loads.

Header Boards

Front end header boards ("headache racks") protect you from your cargo in case of a crash or emergency stop. Make sure the front end structure is in good condition. The front end structure should block the forward movement of any cargo you carry.

Covering Cargo

There are two basic reasons for covering cargo, (1) to protect people from spilled cargo, and (2) to protect the cargo from weather. Spill protection is a safety requirement in many states. Be familiar with the laws in the states you drive in.

You should look at your cargo covers in the mirrors from time to time while driving. A flapping cover can tear loose, uncovering the cargo, and possibly block your view or someone else's.

You cannot inspect sealed loads, but you should check that you don't exceed gross weight and axle weight limits.

Sealed and Containerized Loads

Containerized loads generally are used when freight is carried part way by rail or ship. Delivery by truck occurs at the beginning and/or end of the journey. Some containers have their own tiedown devices or locks that attach directly to a special frame. Others have to be loaded onto flat bed trailers. They must be properly secured just like any other cargo.

3.4 Other Cargo Needing Special Attention

Dry Bulk

Dry Bulk tanks require special care because they often have a high center of gravity, and the load can shift. Be extremely cautious (slow and careful) going around curves and making sharp turns.

Hanging Meat

Hanging meat (suspended beef, pork, lamb) in a refrigerated truck can be a very unstable load with a high center of gravity. Particular caution is needed on sharp curves such as off-ramps and on-ramps. Go slow.

Livestock

Livestock can move around in a trailer, causing unsafe handling. With less than a full load, use false bulkheads to keep livestock bunched together. Even when bunched, special care is necessary because livestock can lean on curves. This shifts the center of gravity and makes rollover more likely.

Oversized Loads

Over-length, over-width, and/or overweight loads require special transit permits. Driving is usually limited to certain times. Special equipment may be necessary such as “wide load” signs, flashing lights, flags, etc. Such loads may require a police escort or pilot vehicles bearing warning signs and/or flashing lights. These special loads require special driving care.

Test Your Knowledge

1. What is the minimum number of tiedowns for any flat bed load?
2. What is the minimum number of tiedowns for a 20-foot load?
3. Name the two basic reasons for covering cargo on an open bed.
4. What must you check before transporting a sealed load?

These questions may be on the test. If you can’t answer them all, re-read Sections 3.3 and 3.4.

Section 4: Transporting Passengers Safely
For drivers needing a passenger endorsement

This Section Covers

- ✓ Definition of a Bus
- ✓ Pre-trip Inspection
- ✓ Loading
- ✓ Safe Driving with Buses

Bus drivers must have a commercial driver license if they drive a vehicle designed to transport 16 or more persons, including the driver.

Bus drivers must have a passenger endorsement on their commercial driver license. To get the endorsement you must pass a knowledge test on Sections 2 and 4 of this manual. (If your bus has air brakes, you must also pass a knowledge test on Section 5.) You must also pass the skills tests required for the class of vehicle you drive.

4.1 Pre-trip Inspection

Before driving your bus, you must be sure it is safe. You must review the inspection report made by the previous driver. Only if defects reported earlier have been certified as repaired or not needed to be repaired, should you sign the previous driver's report. This is your certification that the defects reported earlier have been fixed.

Vehicle Systems

Make sure these things are in good working order before driving:

- ✓ Service brakes, including air hose couplings (if your bus has a trailer or semitrailer).
- ✓ Parking brake.
- ✓ Steering mechanism.
- ✓ Lights and reflectors.
- ✓ Tires (front wheels must not have recapped or regrooved tires).
- ✓ Horn.
- ✓ Windshield wipers.
- ✓ All mirrors.
- ✓ Coupling devices (if present).
- ✓ Wheels and rims.
- ✓ Emergency equipment.

Access Doors and Panels

As you check the outside of the bus, close any open emergency exits. Also, close any open access panels (for baggage, restroom service, engine, etc.) before driving.

Bus Interior

People sometimes damage unattended buses. Always check the interior of the bus before driving to ensure rider safety. Aisles and stairwells should always be clear. The following parts of your bus must be in safe working condition:

- ✓ Each handhold and railing.
- ✓ Floor covering.
- ✓ Signaling devices, including the restroom emergency buzzer, if the bus has a restroom.
- ✓ Emergency exit handles.

The seats must be safe for riders. All seats must be securely fastened to the bus.

Never drive with an open emergency exit door or window. The “Emergency Exit” sign on an emergency door must be clearly visible. If there is a red emergency door light, it must work. Turn it on at night or any other time you use your outside lights.

Roof Hatches

You may lock some emergency roof hatches in a partly open position for fresh air. Do not leave them open as a regular practice. Keep in mind the bus’s higher clearance while driving with them open.

Make sure your bus has the fire extinguisher and emergency reflectors required by law. The bus must also have spare electrical fuses, unless equipped with circuit breakers.

Use Your Seatbelt!

The driver’s seat should have a seat belt. Always use it for safety.

4.2 Loading and Trip Start

Do not allow riders to leave carry-on baggage in a doorway or aisle. There should be nothing in the aisle that might trip other riders. Secure baggage and freight in ways that avoid damage and:

- ✓ Allow the driver to move freely and easily.
- ✓ Allow riders to exit by any window or door in an emergency.
- ✓ Protect riders from injury if carry-ons fall or shift.

Hazardous Materials

Watch for cargo or baggage containing hazardous materials. Most hazardous materials cannot be carried on a bus.

The Federal Hazardous Materials Table shows which materials are hazardous. They pose a risk to health, safety, and property during transportation. The rules require shippers to mark containers of hazardous materials with the materials’ names, identification numbers, and hazard labels. There are nine different 4-inch, diamond-shaped hazard labels like the examples shown in Figure 4-1. Watch for the diamond-shaped labels. Do not transport any hazardous material unless you are sure the rules allow it.

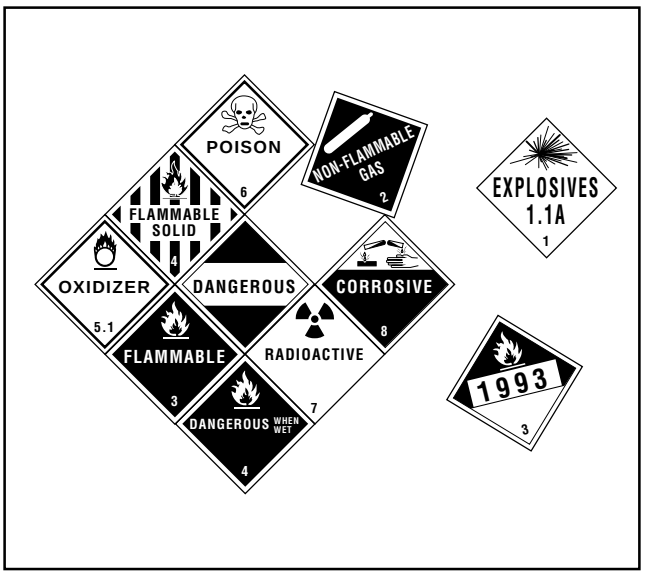

Figure 4-1

Examples of Labels

Forbidden Hazardous Materials

Buses ***may*** carry small-arms ammunition labeled ORM-D, emergency hospital supplies, and drugs. You can carry small amounts of some other hazardous materials if the shipper cannot send them any other way. Buses must ***never*** carry:

- ✓ Class 2 poison, liquid Class 6 poison, tear gas, irritating material.
- ✓ More than 100 pounds of solid Class 7 poisons.
- ✓ Explosives in the space occupied by people, except small-arms ammunition.
- ✓ Labeled radioactive materials in the space occupied by people.
- ✓ More than 500 pounds total of allowed hazardous materials, and no more than 100 pounds of any one class.

Riders sometimes board a bus with an unlabeled hazardous material. They may not know it is unsafe. Do not allow riders to carry on common hazards such as car batteries or gasoline.

Standee Line

No rider may stand forward of the rear of the driver's seat. Buses designed to allow standing must have a 2-inch line on the floor or some other means of showing riders where they cannot stand. This is called the standee line. All standing riders must stay behind it.

At Your Desination

When arriving at the destination or intermediate stops announce:

- ✓ The location.
- ✓ Reason for stopping.
- ✓ Next departure time.
- ✓ Bus number.

Remind riders to take carry-ons with them if they get off the bus. If the aisle is on a lower level than the seats, remind riders of the step-down. It is best to tell them before coming to a complete stop.

Charter bus drivers should not allow riders on the bus until departure time. This will help prevent theft or vandalism of the bus.

Test Your Knowledge

1. Name some things to check in the interior of a bus during a pre-trip inspection.
2. What are some hazardous materials you can transport by bus?
3. What are some hazardous materials you can't transport by bus?
4. What is a standee line?

These questions may be on the test. If you can't answer them all, re-read Sections 4.1 and 4.2.

4.3 On the Road

Passenger Supervision

Many charter and intercity carriers have passenger comfort and safety rules. Mention rules about smoking, drinking, or use of radio and tape players at the start of the trip. Explaining the rules at the start will help avoid trouble later on.

While driving, scan the interior of your bus as well as the road ahead, to the sides, and to the rear. You may have to remind riders about rules, or to keep arms and heads inside the bus.

At Stops

Riders can stumble when getting on or off and when the bus starts or stops. Caution riders to watch their step when leaving the bus. Wait for them to sit down or brace themselves before starting. Starting and stopping should be as smooth as possible to avoid rider injury.

Occasionally, you may have a drunk or disruptive rider. You must ensure this rider's safety as well as that of others. Don't discharge such riders where it would be unsafe for them. It may be safer at the next scheduled stop or a well-lighted area where there are other people. Many carriers have guidelines for handling disruptive riders.

Common Accidents

The Most Common Bus Crashes. Bus crashes often happen at intersections. Use caution, even if a signal or stop sign controls other traffic. School and mass transit buses sometimes scrape off mirrors or hit passing vehicles when pulling out from a bus stop. Remember the clearance your bus needs, and watch for poles and tree limbs at stops. Know the size of the gap your bus needs to accelerate and merge with traffic. Wait for the gap to open before leaving the stop. Never assume other drivers will brake to give you room when you signal or start to pull out.

Speed on Curves

Crashes on curves that kill people and destroy buses result from excessive speed, often when rain or snow has made the road slippery. Every banked curve has a safe "design speed." In good weather, the posted speed is safe for cars but it may be too high for many buses. With good traction, the bus may roll over; with poor traction, it might slide off the curve. Reduce speed for curves! If your bus leans toward the outside on a banked curve, you are driving too fast.

Railroad Crossing Stops

Stop at RR Crossings. Stop your bus between 15 and 50 feet before railroad crossings. Listen and look in both directions for trains. You should open your forward door if it improves your ability to see or hear an approaching train. Before crossing after a train has passed, make sure there isn't another train coming in the other direction on other tracks. If your bus has a manual transmission, never change gears while crossing the tracks.

You may not have to stop but must slow down and carefully check for other vehicles:

- ✓ At streetcar crossings.
- ✓ At railroad tracks used only for industrial switching within a business district.
- ✓ Where a policeman or flagman is directing traffic.
- ✓ At a traffic signal controlled crossing if the traffic signal shows green.
- ✓ At crossings marked as "exempt" or "abandoned."

Note: School buses must meet stricter railroad crossing requirements (see page 12-5)

Drawbridges

Stop at Drawbridges. Stop at drawbridges that do not have a signal light or traffic control attendant. Stop at least 50 feet before the draw of the bridge. Look to make sure the draw is completely closed before crossing. You do not need to stop, but must slow down and make sure it's safe, when:

✓ There is a traffic light showing green.

✓ The bridge has an attendant or traffic officer that controls traffic whenever the bridge opens.

4.4 After-trip Vehicle Inspection

Inspect your bus at the end of each shift. If you work for an interstate carrier, you must complete a written inspection report for each bus driven. The report must specify each bus and list any defect that would affect safety or result in a breakdown. If there are no defects, the report should say so.

Riders sometimes damage safety-related parts such as hand-holds, seats, emergency exits, and windows. If you report this damage at the end of a shift, mechanics can make repairs before the bus goes out again. Mass transit drivers should also make sure passenger signaling devices and brake-door interlocks work properly.

4.5 Prohibited Practices

Avoid fueling your bus with riders on board unless absolutely necessary. Never refuel in a closed building with riders on board.

Don't talk with riders, or engage in any other distracting activity, while driving.

Do not tow or push a disabled bus with riders aboard the vehicle, unless getting off would be unsafe. Only tow or push the bus to the nearest safe spot to discharge passengers. Follow your employer's guidelines on towing or pushing disabled buses.

4.6 Use of Brake-door Interlocks

Urban mass transit coaches may have a brake and accelerator interlock system. The interlock applies the brakes and holds the throttle in idle position when the rear door is open. The interlock releases when you close the rear door. Do not use this safety feature in place of the parking brake.

Test Your Knowledge

1. Does it matter where you make a disruptive passenger get off the bus?
2. How far from a railroad crossing should you stop?
3. When must you stop before crossing a drawbridge?
4. Describe from memory the "prohibited practices" listed above.
5. The rear door of a transit bus has to be open to put on the parking brake. True or False?

These questions may be on the test. If you can't answer them all, re-read Sections 4.3, 4.4, 4.5, and 4.6.

Section 5: Air Brakes
For drivers driving vehicles with air brakes

This Section Covers

- ✓ Air Brake System Parts
- ✓ Dual Air Brake Systems
- ✓ Inspecting Air Brakes
- ✓ Using Air Brakes

This section tells you about air brakes. If you want to drive a truck or bus with air brakes, or pull a trailer with air brakes, you need to read this section. If you want to pull a trailer with air brakes, you also need to read Section 6: Combination Vehicles.

Air brakes use ***compressed air*** to make the brakes work. Air brakes are a good and safe way of stopping large and heavy vehicles, but the brakes must be well maintained and used properly.

Air brakes are really three different braking systems: service brake, parking brake, and emergency brake.

- ✓ The ***service brake system*** applies and releases the brakes when you use the brake pedal during normal driving.
- ✓ The ***parking brake system*** applies and releases the parking brakes when you use the parking brake control.
- ✓ The ***emergency brake system*** uses parts of the service and parking brake systems to stop the vehicle in the event of a brake system failure.

The parts of these systems are discussed in greater detail below.

5.1 The Parts of an Air Brake System

There are many parts to an air brake system. You should know about the parts discussed here.

Air Compressor

The air compressor pumps air into the air storage tanks (reservoirs). The air compressor is connected to the engine through gears or a v-belt. The compressor may be air cooled or may be cooled by the engine cooling system. It may have its own oil supply, or be lubricated by engine oil. If the compressor has its own oil supply, check the oil level before driving.

Air Compressor Governor

The governor controls when the air compressor will pump air into the air storage tanks. When air tank pressure rises to the “cut-out” level (around 125 pounds per square inch or “psi”), the governor stops the compressor from pumping air. When the tank pressure falls to the “cut-in” pressure (around 100 psi), the governor allows the compressor to start pumping again.

Air Storage Tanks

Air storage tanks are used to hold compressed air. The number and size of air tanks varies among vehicles. The tanks will hold enough air to allow the brakes to be used several times even if the compressor stops working.

Air Tank Drains

Compressed air usually has some water and some compressor oil in it which is bad for the air brake system. For example, the water can freeze in cold weather and cause brake failure. The water and oil tend to collect in the bottom of the air tank. Be sure that you drain the air tanks completely. Each air tank is equipped with a drain valve in the bottom. There are two types:

- ✓ Manually operated by turning a quarter turn, shown in Figure 5-1, or by pulling a cable. You must drain the tanks yourself at the end of each day of driving.
- ✓ Automatic — the water and oil is automatically expelled. They may be equipped for manual draining as well.

The automatic types are available with electric heating devices. These help prevent freeze up of the automatic drain in cold weather.

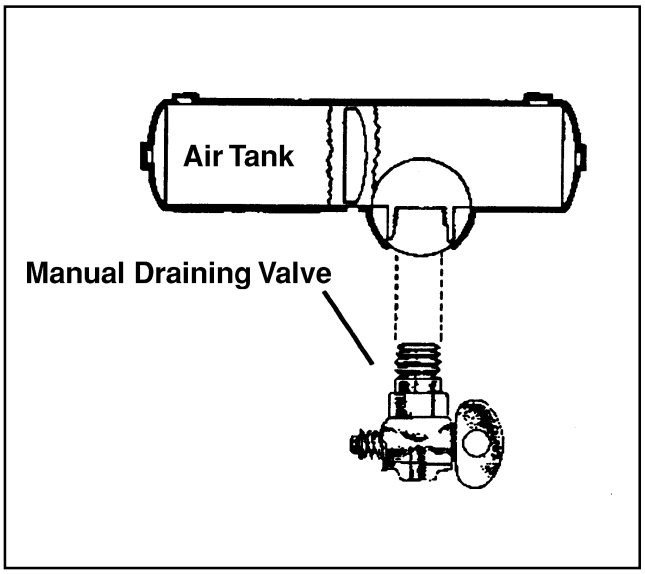

Figure 5-1

Manual Drain Valve

Alcohol Evaporator

Some air brake systems have an alcohol evaporator to put alcohol into the air system. This helps to reduce the risk of ice in air brake valves and other parts during cold weather. Ice inside the system can make the brakes stop working.

Check the alcohol container and fill up as necessary, every day during cold weather. **Daily air tank drainage is still needed to get rid of water and oil.** (Unless the system has automatic drain valves.)

Safety Valve

A safety relief valve is installed in the first tank the air compressor pumps air to. The safety valve protects the tank and the rest of the system from too much pressure. The valve is usually set to open at 150 psi. If the safety valve releases air, something is wrong. Have the fault fixed by a mechanic.

The Brake Pedal

You put the brakes on by pushing down the brake pedal. (It is also called the foot valve or treadle valve.) Pushing the pedal down harder applies more air pressure. Letting up on the brake pedal reduces the air pressure and releases the brakes. Releasing the brakes lets some compressed air go out of the system, so the air pressure in the tanks is reduced. It must be made up by the air compressor. Pressing and releasing the pedal unnecessarily can let air out faster than the compressor can replace it. If the pressure gets too low, the brakes won't work.

Foundation Brakes

Foundation brakes are used at each wheel. The most common type is the s-cam drum brake, shown in Figure 5-2. The parts of the brake are discussed below:

Brake Drums, Shoes, and Linings. Brake drums are located on each end of the vehicle's axles. The wheels are bolted to the drums. The braking mechanism is inside the drum. To stop, the brake shoes and linings are pushed against the inside of the drum. This causes friction which slows the vehicle (and creates heat). The heat a drum can take without damage depends on how hard and how long the brakes are used. Too much heat can make the brakes stop working.

S-cam Brakes. When you push the brake pedal, air is let into each brake chamber (see Figure 5-2). Air pressure pushes the rod out, moving the slack adjuster, thus twisting the brake camshaft. This turns the s-cam (so called because it is shaped like the letter "S"). The s-cam forces the brake shoes away from

one another and presses them against the inside of the brake drum. When you release the brake pedal, the s-cam rotates back and a spring pulls the brake shoes away from the drum, letting the wheels roll freely again.

Wedge Brakes. In this type of brake, the brake chamber push rod pushes a wedge directly between the ends of two brake shoes. This shoves them apart and against the inside of the brake drum. Wedge brakes may have a single brake chamber, or two brake chambers, pushing wedges in at both ends of the brake shoes. Wedge type brakes may be self-adjusting or may require manual adjustment.

Disc Brakes. In air-operated disc brakes, air pressure acts on a brake chamber and slack adjuster, like s-cam brakes. But instead of the s-cam, a "power screw" is used. The pressure of the brake chamber on the slack adjuster turns the power screw. The power screw clamps the disc or rotor between the brake lining pads of a caliper, similar to a large c-clamp.

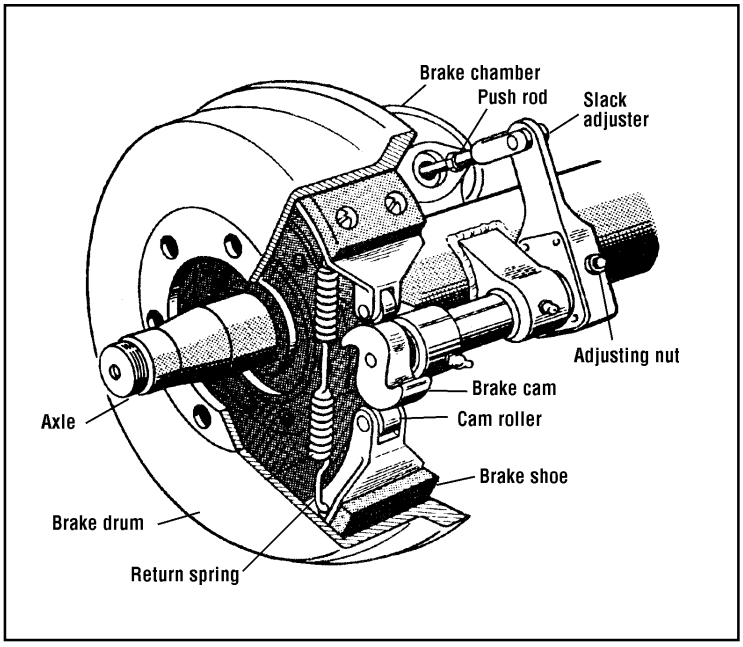

Figure 5-2

S-cam Air Brake

Wedge brakes and disc brakes are less common than s-cam brakes.

Supply Pressure Gauges

All air-braked vehicles have a pressure gauge connected to the air tank. If the vehicle has a dual air brake system, there will be a gauge for each half of the system. (Or a single gauge with two needles.) Dual systems will be discussed later. These gauges tell you how much pressure is in the air tanks.

Application Pressure Gauge

This gauge shows how much air pressure you are applying to the brakes. (This gauge is not on all vehicles.) Increasing application pressure to hold the same speed means the brakes are fading. You should slow down and use a lower gear. The need for increased pressure can also be caused by brakes out of adjustment, air leaks, or mechanical problems.

Low Air Pressure Warning

A low air pressure warning signal is required on all vehicles with air brakes. A warning signal you can see must come on before the air pressure in the tanks falls below 60 psi. (Or one half the compressor governor cutout pressure on older vehicles.) The warning is usually a red light. A buzzer may also come on.

Another type of warning is the "wig wag." This device drops a mechanical arm into your view when the pressure in the system drops below 60 psi. An automatic wig wag will rise out of your view when the pressure in the system goes above 60 psi. The manual reset type must be placed in the "out of view" position manually. It will not stay in place until the pressure in the system is above 60 psi.

On large buses it is common for the low pressure warning devices to signal at 80-85 psi.

Stop Light Switch

Drivers behind you must be warned when you put your brakes on. The air brake system does this with an electric switch that works by air pressure. The switch turns on the brake lights when you put on the air brakes.

Front Brake Limiting Valve

Some older vehicles (made before 1975) have a front brake limiting valve and a control in the cab. The control is usually marked “normal” and “slippery.” When you put the control in the “slippery” position, the limiting valve cuts the “normal” air pressure to the front brakes by half. Limiting valves were used to reduce the chance of the front wheels skidding on slippery surfaces. However, they actually reduce the stopping power of the vehicle. Front wheel braking is good under all conditions. Tests have shown front wheel skids from braking are not likely even on ice. ***Make sure the control is in the “normal” position to have normal stopping power.***

Many vehicles have automatic front wheel limiting valves. They reduce the air to the front brakes except when the brakes are put on very hard (60 psi or more application pressure). These valves cannot be controlled by the driver.

Spring Brakes

All trucks, truck tractors, and buses must be equipped with emergency brakes and parking brakes. They must be held on by mechanical force (because air pressure can eventually leak away). Spring brakes are usually used to meet these needs. When driving, powerful springs are held back by air pressure. If the air pressure is removed, the springs put on the brakes. A parking brake control in the cab allows the driver to let the air out of the spring brakes. This lets the springs put the brakes on. A leak in the air brake system which causes all the air to be lost will also cause the springs to put on the brakes.

Tractor and straight truck spring brakes will come fully on when air pressure drops to a range of 20 to 45 psi (typically 20 to 30 psi). Do not wait for the brakes to come on automatically. When the low air pressure warning light and buzzer first come on, bring the vehicle to a safe stop right away, while you can still control the brakes.

The braking power of spring brakes depends on the brakes being in adjustment. If the brakes are not adjusted properly, neither the regular brakes nor the emergency/parking brakes will work right.

Parking Brake Controls

In newer vehicles with air brakes, you put on the parking brakes using a ***diamond-shaped, yellow, push-pull control knob***. You pull the knob out to put the parking brakes (spring brakes) on, and push it in to release them. On older vehicles, the parking brakes may be controlled by a lever. Use the parking brakes whenever you park.

Caution. Never push the brake pedal down when the spring brakes are on. If you do, the brakes could be damaged by the combined forces of the springs and the air pressure. Many brake systems are designed so this will not happen. But not all systems are set up that way, and those that are may not always work. It is much better to develop the habit of not pushing the brake pedal down when the spring brakes are on.

Modulating Control Valves. In some vehicles a control handle on the dash board may be used to apply the spring brakes gradually. This is called a modulating valve. It is spring loaded so you have a feel for the braking action. The more you move the control lever, the harder the spring brakes come on. They work this way so you can control the spring brakes if the service brakes fail. When parking a vehicle with a modulating control valve, move the lever as far as it will go and hold it in place with the locking device.

Dual Parking Control Valves. When main air pressure is lost, the spring brakes come on. Some vehicles, such as buses, have a separate air tank which can be used to release the spring brakes. This is so you can move the vehicle in an emergency. One of the valves is a push-pull type and is used to put on the spring brakes for parking. The other valve is spring loaded in the “out” position. When you push the control in, air from the separate air tank releases the spring brakes so you can move. When you release the button, the spring brakes come on again. There is only enough air in the separate tank to do this a few times. Therefore, plan carefully when moving. Otherwise, you may be stopped in a dangerous location when the separate air supply runs out.

Test Your Knowledge

1. Why must air tanks be drained?
2. What is a supply pressure gauge used for?
3. All vehicles with air brakes must have a low air pressure warning signal. True or False?
4. What are spring brakes?
5. Front wheel brakes are good under all conditions. True or False?

These questions may be on the test. If you can't answer them all, re-read Section 5.1.

5.2 Dual Air Brake

Most newer heavy-duty vehicles use dual air brake systems for safety. A dual air brake system has two separate air brake systems which use a single set of brake controls. Each system has its own air tanks, hoses, lines, etc. One system typically operates the regular brakes on the rear axle or axles. The other system operates the regular brakes on the front axle (and possibly one rear axle). Both systems supply air to the trailer (if there is one). The first system is called the "primary" system. The other is called the "secondary" system.

Before driving a vehicle with a dual air system, allow time for the air compressor to build up a minimum of 100 psi pressure in both the primary and secondary systems. Watch the primary and secondary air pressure gauges (or needles, if the system has two needles in one gauge). Pay attention to the low air pressure warning light and buzzer. The warning light and buzzer should shut off when air pressure in both systems rises to a value set by the manufacturer. This value must be greater than 60 psi.

The warning light and buzzer should come on before the air pressure drops below 60 psi in either system. If this happens while driving, you should stop right away and safely park the vehicle. If one air system is very low on pressure, either the front or the rear brakes will not be operating fully. This means it will take you longer to stop. Bring the vehicle to a safe stop and have the air brakes system fixed.

5.3 Inspecting Air Brake Systems

You should use the basic seven-step inspection procedure described in Section 2 to inspect your vehicle. There are more things to inspect on a vehicle with air brakes than one without them. We discuss these things below, in the order that they fit into the seven-step method.

During Step 2 Engine Compartment Checks

Check Air Compressor Drive Belt (if compressor is belt driven). If the air compressor is belt-driven, check the condition and tightness of the belt. The bels should be in good condition.

During Step 5 Walk-around Inspecting

Check Manual Slack Adjusters on S-cam Brakes. Park on level ground and chock the wheels to prevent the vehicle from moving. Turn off the parking brakes so you can move the slack adjusters. Use gloves and pull hard on each slack adjuster that you can get to. If a slack adjuster moves more than about one inch where the push rod attaches to it, it probably needs adjustment. Adjust it or have it adjusted. Vehicles with too much brake slack can be very hard to stop. Out-of-adjustment brakes are the most common problem found in roadside inspections. Be safe. Check the slack adjusters.

Check Brake Drums (or Discs), Linings, and Hoses. Brake drums (or discs) must not have cracks longer than one half the width of the friction area. Linings (friction material) must not be loose or soaked with oil or grease. They must not be dangerously thin. Mechanical parts must be in place, not broken or missing. Check the air hoses connected to the brake chambers to make sure they aren't cut or worn due to rubbing.

Step 7 Final Air Brake Check

Do the following checks instead of the hydraulic brake check shown in Section 2 "Step 7: Check Brake System."

Test Low Pressure Warning Signal. Shut the engine off when you have enough air pressure so that the low pressure warning signal is not on. Turn the electrical power on and step on and off the brake pedal to reduce air tank pressure. The low air pressure warning signal must come on before the pressure drops to less than 60 psi in the air tank (or tank with the lowest air pressure, in dual air systems).

If the warning signal doesn't work, you could lose air pressure and you would not know it. This could cause sudden emergency braking in a single circuit air system. In dual systems the stopping distance will be increased. Only limited braking can be done before the spring brakes come on.

Check That the Spring Brakes Come on Automatically. Chock the wheels, release the parking brakes when you have enough air pressure to do it, and shut the engine off. Step on and off the brake pedal to reduce the air tank pressure. The "parking brake" knob should pop out when the air pressure falls to the manufacturer's specification (usually in a range between 20-40 psi). This causes the spring brakes to come on.

Check Rate of Air Pressure Buildup. When the engine is at operating rpm, the pressure should build from 85 to 100 psi within 45 seconds in dual air systems. (If the vehicle has larger than minimum air tanks, the buildup time can be longer and still be safe. Check the manufacturer's specifications.) In single air systems (pre-1975), typical requirements are pressure buildup from 50 to 90 psi within three minutes with the engine at an idle speed of 600-900 rpm.

If air pressure does not build up fast enough, your pressure may drop too low during driving, requiring an emergency stop. Don't drive until you get the problem fixed.

Test Air Leakage Rate. With a fully-charged air system (typically 125 psi), turn off the engine, release the service brake, and time the air pressure drop. The loss rate should be less than two psi in one minute for single vehicles and less than three psi in one minute for combination vehicles. Then apply 90 psi or more with the brake pedal. After the initial pressure drop, if the air pressure falls more than three psi in one minute for single vehicles (more than four psi for combination vehicles), the air loss rate is too much. Check for air leaks and fix before driving the vehicle. Otherwise, you could lose your brakes while driving.

Check Air Compressor Governor Cut-in and Cut-out Pressures. Pumping by the air compressor should start at about 100 psi and stop at about 125 psi. (Check manufacturer's specifications.) Run the engine at a fast idle. The air governor should cut out the air compressor at about the manufacturer's specified pressure. The air pressure shown by your gauge(s) will stop rising. With the engine idling, step on and off the brake to reduce the air tank pressure. The compressor should cut in at about the manufacturer's specified cut-in pressure. The pressure should begin to rise.

If the air governor does not work as described above, it may need to be fixed. A governor that does not work properly may not keep enough air pressure for safe driving.

Test Parking Brake. Stop the vehicle, put the parking brake on, and gently pull against it in a low gear to test that the parking brake will hold.

Test Service Brakes. Wait for normal air pressure, release the parking brake, move the vehicle forward slowly (about five mph), and apply the brakes firmly using the brake pedal. Note any vehicle "pulling" to one side, unusual feel, or delayed stopping action.

This test may show you problems which you otherwise wouldn't know about until you needed the brakes on the road.

Test Your Knowledge

1. What is a dual air brake system?
2. What are the slack adjusters?
3. How can you check slack adjusters?
4. How can you test the low pressure warning signal?
5. What can you check that the spring brakes come on automatically?
6. What are the maximum leakage rates?

These questions may be on the test. If you can't answer them all, re-read Sections 5.2 and 5.3.

5.4 Using Air Brakes

Normal Stops

Push the brake pedal down. Control the pressure so the vehicle comes to a smooth, safe stop. If you have a manual transmission, don't push the clutch in until the engine rpm is down close to idle. When stopped, select a starting gear.

Emergency Stops

If somebody suddenly pulls out in front of you, your natural response is to hit the brakes. This is a good response if there's enough distance to stop and you use the brakes correctly.

You should brake in a way that will keep your vehicle in a straight line and allow you to turn if it becomes necessary. You can use the "controlled braking" method or the "stab braking" method.

Controlled Braking. With this method, you apply the brakes as hard as you can ***without*** locking the wheels. Keep steering wheel movements very small while doing this. If you need to make a larger steering adjustment or if the wheels lock, release the brakes. Re-apply the brakes as soon as you can.

Stab Braking.

✓ Apply your brakes all the way.

✓ Release brakes when wheels lock up.

✓ As soon as the wheels start rolling, apply the brakes fully again. (It can take up to one second for the wheels to start rolling after you release the brakes. If you re-apply the brakes before the wheels start rolling, the vehicle won't straighten out.)

Note: If you drive a vehicle with anti-lock brakes, you should read and follow the directions found in the Owner's Manual for stopping quickly.

Stopping Distance

We talked about stopping distance in Section 2 under "Speed and Stopping Distance." With air brakes there is an added delay: the time required for the brakes to work after the brake pedal is pushed. With hydraulic brakes (used on cars and light/medium trucks), the brakes work instantly. However, with air brakes, it takes a little time (one half second or more) for the air to flow through the lines to the brakes. Thus, the total stopping distance for vehicles with air brake systems is made up of ***four*** different factors.

Perception Distance + Reaction Distance + Brake Lag Distance + Effective Braking Distance =
Total Stopping Distance

The air brake lag distance at 55 mph on dry pavement adds about 32 feet. So at 55 mph for an average driver under good traction and brake conditions, the total stopping distance is over 300 feet. This is longer than a football field.

Brake Fading or Failure

Brakes are designed so brake shoes or pads rub against the brake drum or disks to slow the vehicle. Braking creates heat, but brakes are designed to take a lot of heat. However, brakes can fade or fail from excessive heat caused by using them too much and not relying on the engine braking effect.

Excessive use of the service brakes results in overheating and leads to brake fade. Brake fade results from excessive heat causing chemical changes in the brake lining which reduce friction and also causing expansion of the brake drums. As the overheated drums expand, the brake shoes and linings have to move farther to contact the drums, and the force of this contact is also reduced. Continued overuse may increase brake fade until the vehicle cannot be slowed down or stopped at all.

Brake fade is also affected by adjustment. To safely control a vehicle, every brake must do its share of the work. Brakes out of adjustment will stop doing their share before those that are in adjustment. The other brakes can then overheat and fade and there will not be sufficient braking available to control the vehicle(s). Brakes can get out of adjustment quickly, especially when they are hot. Therefore, brake adjustment must be checked frequently.

Proper Braking Technique

Remember: The use of brakes on a long and/or steep downgrade is only a supplement to the braking effect of the engine. Once the vehicle is in the proper low gear, the following is the proper braking technique:

- ✓ Apply the brakes just hard enough to feel a definite slowdown.
- ✓ When your speed has been reduced to approximately five mph below your “safe” speed, release the brakes. (This brake application should last for about three seconds.)
- ✓ When your speed has increased to your “safe” speed, repeat steps 1 and 2.

For example, if your “safe” speed is 40 mph, you would not apply the brakes until your speed reaches 40 mph. You now apply the brakes hard enough to gradually reduce your speed to 35 mph and then release the brakes. Repeat this as often as necessary until you have reached the end of the downgrade.

Low Air Pressure

If the low air pressure warning comes on, ***stop and safely park your vehicle as soon as possible.*** There might be an air leak in the system. Controlled braking is possible only while enough air remains in the air tanks. The spring brakes will come on when the air pressure drops into the range of 20 to 45 psi. A heavily loaded vehicle will take a long distance to stop because the spring brakes do not work on all axles. Lightly loaded vehicles or vehicles on slippery roads may skid out of control when the spring brakes come on. It is much safer to stop while there is enough air in the tanks to use the foot brakes.

Parking Brakes

Any time you park, use the parking brakes, except as noted below. Pull the parking brake control knob out to apply the parking brakes; push it in to release them. The control will be a yellow, diamond-shaped knob labeled “parking brakes” on newer vehicles. On older vehicles, it may be a round blue knob or some other shape (including a lever that swings from side to side or up and down).

Don’t use the parking brakes if the brakes are very hot (from just having come down a steep grade), or if the brakes are very wet in freezing temperatures. If they are used while they are very hot, they can be damaged by the heat. If they are used in freezing temperatures when the brakes are very wet, they can freeze so the vehicle cannot move. Use wheel chocks to hold the vehicle. Let hot brakes cool before using the parking brakes. If the brakes are wet, use the brakes lightly while driving in a low gear to heat and dry them.

If your vehicle does not have automatic air tank drains, drain your air tanks at the end of each working day to remove moisture and oil. Otherwise, the brakes could fail.

Never leave your vehicle unattended without applying the parking brakes or chocking the wheels. Your vehicle might roll away and cause injury and damage.

Test Your Knowledge

1. Why should you be in the proper gear before starting down a hill?
2. What factors can cause brakes to fade or fail?
3. The use of brakes on a long steep downgrade is only a supplement to the braking effect of the engine. True or False?
4. If you are away from your vehicle only a short time, you don't need to use the parking brake. True or False?
5. How often should you drain air tanks?

These questions may be on the test. If you can't answer them all, re-read Section 5.4.

Section 6: Combination Vehicles
For drivers needing a group "A" CDL

This Section Covers

- ✓ Driving Combinations
- ✓ Combination Vehicle Air Brakes
- ✓ Inspecting Combinations

This section provides information needed to pass the tests for combination vehicles (tractor-trailer, doubles, triples, straight truck, and trailer). The information is only to give you the minimum knowledge needed for driving common combination vehicles. You should also study Section 7 if you need to pass the tests for doubles-triples.

6.1 Driving Combination Vehicles Safely

Combination vehicles are usually heavier, longer, and require more driving skill than single commercial vehicles. This means that drivers of combination vehicles need more knowledge and skill than drivers of single vehicles. In this section, we talk about some important safety factors that apply specifically to combination vehicles.

Rollover Risks

More than half of truck driver deaths in crashes are the result of truck rollovers. When more cargo is piled up in a truck, the "center of gravity" moves higher up from the road. The truck becomes easier to turn over. Fully loaded rigs are ten times more likely to roll over in a crash than empty rigs.

The following two things will help you prevent rollover: ***keep the cargo as close to the ground as possible and drive slowly around turns.*** Keeping cargo low is even more important in combination vehicles than in straight trucks. Also, keep the load centered on your rig. If the load is to one side so it makes a trailer lean, a rollover is more likely. Make sure your cargo is centered and spread out as much as possible. (Cargo distribution is covered in Section 3 of this manual.)

Rollovers happen when you turn too fast. Drive slowly around corners, on-ramps, and off-ramps. Avoid quick lane changes, especially when fully loaded.

Steer Gently

Trucks with trailers have a dangerous "crack-the-whip" effect. When you make a quick lane change, the crack-the-whip effect can turn the trailer over. There are many accidents where only the trailer has overturned.

"Rearward amplification" causes the crack-the-whip effect. Figure 6-1 shows eight types of combination vehicles and the rearward amplification each has in a quick lane change. Rigs with the least crack-the-whip effect are shown at the top and those with the most at the bottom. Rearward amplification of 2.0 in the chart means that the rear trailer is twice as likely to turn over as the tractor. You can see that triples have a rearward amplification of 3.5. This means you can roll the last trailer of triples 3.5 times as easily as a five-axle tractor-semi.

Steer gently and smoothly when you are pulling trailers. If you make a sudden movement with your steering wheel, your trailer could tip over. Follow far enough behind other vehicles (at least one second for each ten feet of your vehicle length, plus another second if going over 40 mph). Look far enough

down the road to avoid being surprised and having to make a sudden lane change. At night, drive slowly enough to see obstacles with your headlights before it is too late to change lanes or stop gently. Slow down to a safe speed ***before*** going into a turn.

Brake Early

Control your speed whether fully loaded or empty. Large combination vehicles take longer to stop when they are empty than when they are fully loaded. When lightly loaded, the very stiff suspension springs and strong brakes give poor traction and make it very easy to lock up the wheels. Your trailer can swing out and strike other vehicles. Your tractor can jackknife very quickly (Figure 6-2). You must also be very careful about driving "bobtail" tractors (tractors without semitrailers). Tests have shown that bobtails can be very hard to stop smoothly. It takes them longer to stop than a tractor-semitrailer loaded to maximum gross weight.

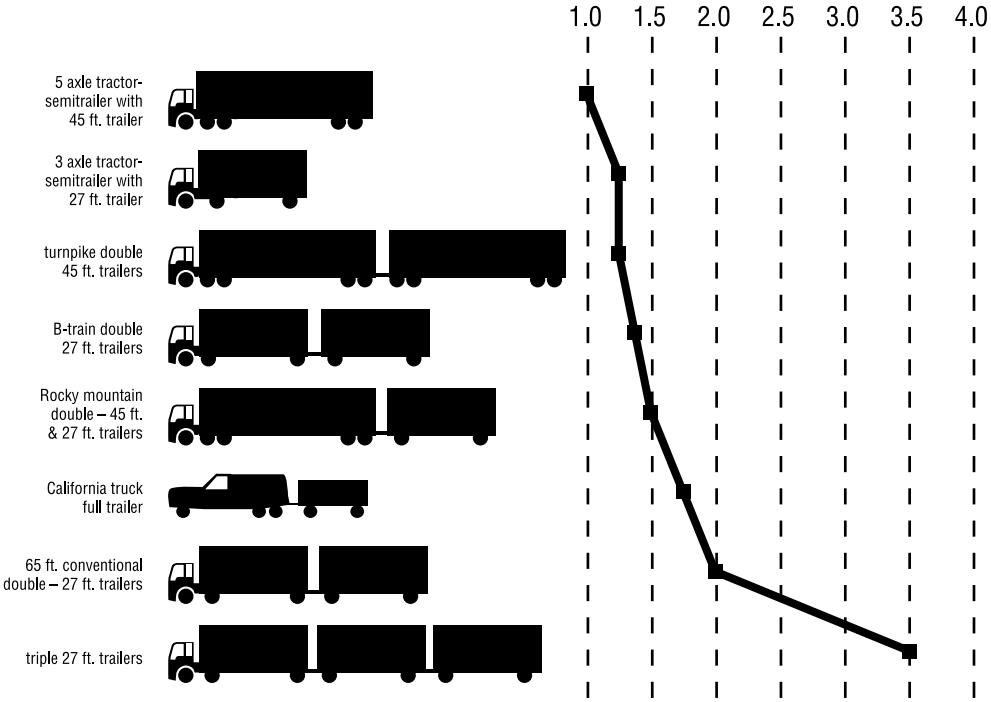

(from R.D. Ervin, R.L. Nisonger, C.C. MacAdam, and P.S. Fancher, "Influence of size and weight variables on the stability and control properties of heavy trucks," University of Michigan Transportation Research Institute, 1983.)

Figure 6-1

Influence of Combination Type on Rearward Amplification

In any combination rig, allow lots of following distance and look far ahead, so you can brake early. Don't be caught by surprise and have to make a "panic" stop.

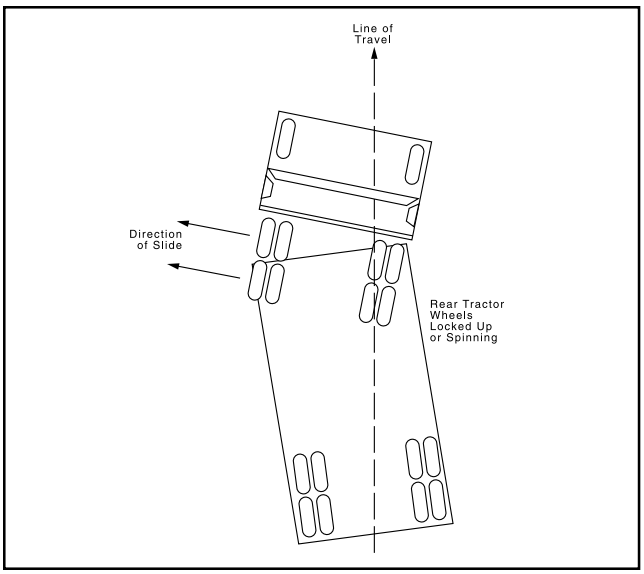

Figure 6-2

Tractor Jackknife

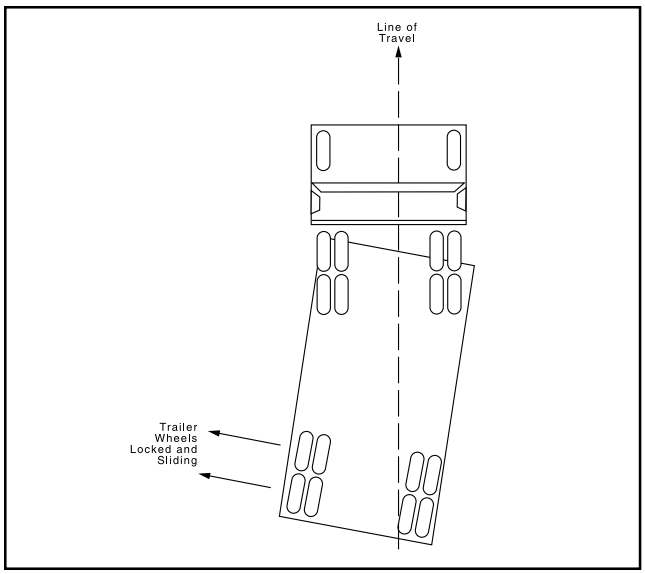

Figure 6-3

Trailer Jackknife

Prevent Trailer Skids

When the wheels of a trailer lock up, the trailer will tend to swing around. This is more likely to happen when the trailer is empty or lightly loaded. This type of jackknife is often called a “trailer jackknife.” This is shown in Figure 6-3.

The procedure for stopping a trailer skid is as follows:

Recognize the Skid. The earliest and best way to recognize that the trailer has started to skid is by seeing it in your mirrors. Any time you apply the brakes hard, check the mirrors to make sure the trailer is staying where it should be. Once the trailer swings out of your lane, it’s very difficult to prevent a jackknife.

Stop Using the Brake. Release the brakes to get traction back. Do ***not*** use the trailer hand brake (if you have one) to “straighten out the rig.” This is the wrong thing to do since the brakes on the trailer wheels caused the skid in the first place. Once the trailer wheels grip the road again, the trailer will start to follow the tractor and straighten out.

Turn Wide

When a vehicle goes around a corner, the rear wheels follow a different path than the front wheels. This is called ***offtracking*** or “cheating.” Figure 6-4 shows how offtracking causes the path followed by a tractor-semi to be wider than the rig itself. Longer vehicles will offtrack more. The rear wheels of the powered unit (truck or tractor) will offtrack some, and the rear wheels of the trailer will offtrack even more. If there is more than one trailer, the rear wheels of the last trailer will offtrack the most. Steer the front end wide enough around a corner so the rear end does not run over the curb, pedestrians, other vehicles, etc. However, keep the rear

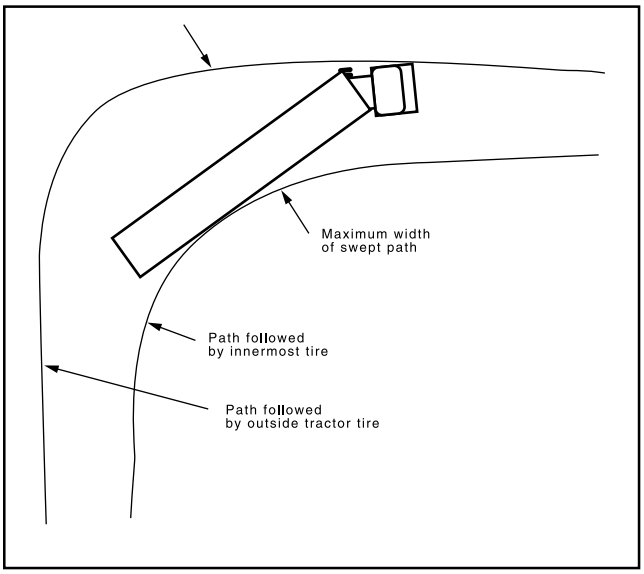

Figure 6-4

Offtracking in a 90-degree turn

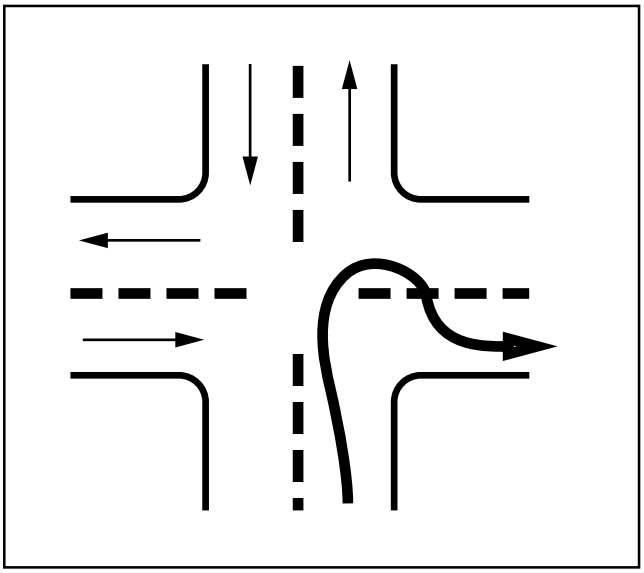

Figure 6-5

Do this so cars don’t try to pass you on the right.

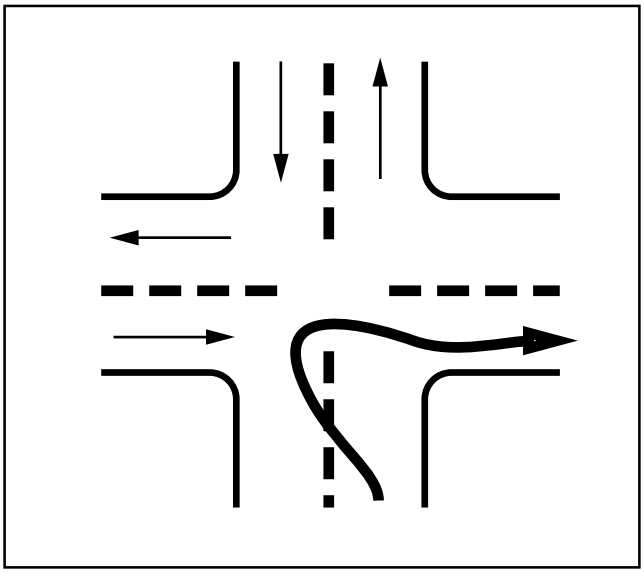

Figure 6-6

Don’t do this!

of your vehicle close to the curb. This will stop other drivers from passing you on the right. If you cannot complete the turn without entering another traffic lane, turn wide as you ***complete the turn*** (Figure 6-5). This is better than swinging wide to the left before starting the turn because it will keep other drivers from passing you on the right. If drivers pass you on the right, you might collide with them when you turn.

Test Your Knowledge

1. What two things are important to prevent rollover?
2. When you turn suddenly while pulling doubles, which trailer is most likely to turn over?
3. Why should you not use the trailer hand brake to straighten out a jackknifing trailer?
4. What is offtracking?
5. Why should you turn like it shows in Figure 6-5?

These questions may be on the test. If you can't answer them all, re-read Section 6.1.

6.2 Combination Vehicle Air Brakes

You should study "Section 5: Air Brakes" before reading this. In combination vehicles the braking system has parts to control the trailer brakes, in addition to the parts described in Section 5. These parts are described below:

Trailer Hand Valve

The trailer hand valve (also called the trolley valve or Johnson bar) works the trailer brakes. The trailer hand valve should be used only to test the trailer brakes. Do ***not*** use it in driving because of the danger of making the trailer skid. The foot brake sends air to ***all*** of the brakes on the vehicle, including the trailer(s). There is much less danger of causing a skid or jackknife when using just the foot brake.

Never use the hand valve for parking because all the air might leak out, unlocking the brakes in trailers that don't have spring brakes. Always use the ***parking brakes*** when parking. If the trailer does not have spring brakes, use wheel chocks to keep the trailer from moving.

Tractor Protection Valve

The tractor protection valve keeps air in the tractor or truck should the trailer break away or develop a bad leak. The tractor protection valve is controlled by the "trailer air supply" control valve in the cab. The control valve allows you to open and shut the tractor protection valve. The tractor protection valve will close automatically if air pressure is low (in the range of 20 to 45 psi). When the tractor protection valve closes, it stops any air from going out of the tractor. It also lets the air out of the trailer emergency line. This causes the trailer emergency brakes to come on. (Emergency brakes are covered later.)

Trailer Air Supply Control

The trailer air supply control on newer vehicles is a red eight-sided knob which you use to control the tractor protection valve. You push it in to supply the trailer with air, and pull it out to shut the air off and put on the trailer emergency brakes. The valve will pop out (thus closing the tractor protection valve) when the air pressure drops into the range of 20 to 45 psi. Tractor protection valve controls or "emergency" valves on older vehicles may not operate automatically. There may be a lever rather than a knob. The "normal" position is used for pulling a trailer. The "emergency" position is used to shut the air off and put on the trailer emergency brakes.

Trailer Air Lines

Every combination vehicle has two air lines, the ***service*** line and the ***emergency*** line. They run between each vehicle (tractor to trailer, trailer to dolly, dolly to second trailer, etc.)

Service Air Line. The ***service line*** (also called the control line or signal line) carries air which is controlled by the foot brake or the trailer hand brake. Depending on how hard you press the foot brake or hand valve, the pressure in the service line will similarly change. The service line is connected to ***relay valves***. These valves allow the trailer brakes to be applied more quickly than would otherwise be possible.

Emergency Air Line. The emergency line (also called the supply line) has two purposes. First, it supplies air to the trailer air tanks. Second, the emergency line controls the emergency brakes on combination vehicles. ***Loss of air pressure*** in the emergency line causes the trailer emergency brakes to come on. The pressure loss could be caused by a trailer breaking loose, thus tearing apart the emergency air hose. Or it could be caused by a hose, metal tubing, or other part which breaks, letting the air out. When the emergency line loses pressure, it also causes the tractor protection valve to close (the air supply knob will pop out).

Emergency lines are often coded with the color ***red*** (red hose, red coupler, or other parts) to keep from getting mixed up with the ***blue*** service line.

Hose Couplers (Glad Hands)

Glad hands are coupling devices used to connect the service and emergency air lines from the truck or tractor to the trailer. The couplers have a rubber seal which prevents air from escaping. Clean the couplers and rubber seals before a connection is made. When connecting the glad hands, press the two seals together with the couplers at a 90 degree angle to each other. A turn of the glad hand attached to the hose will join and lock the couplers.

Some vehicles have “dead end” or dummy couplers to which the hoses may be attached when they are not in use. This will prevent water and dirt from getting into the coupler and the air lines. It is very important to keep the air supply clean. Use the dummy couplers when the air lines are not connected to a trailer. If there are no dummy couplers, the glad hands can sometimes be locked together (depending on the couplings). Locking the glad hands may allow the tractor protection value to be charged, allowing full braking to the steering axle in a bobtail situation.

When coupling, make sure to couple the proper glad hands together. To help avoid mistakes, colors are sometimes used. Blue is used for the service lines and red for the emergency (supply) lines. Sometimes, metal tags are attached to the lines with the words “service” and “emergency” stamped on them.

If you do cross the air lines, supply air will be sent to the service line instead of going to charge the trailer air tanks. Air will not be available to release the trailer spring brakes (parking brakes). If the spring brakes don’t release when you push the trailer air supply control, check the air line connections.

Older trailers do not have spring brakes. If the air supply in the trailer air tank has leaked away there will be no emergency brakes, and the trailer wheels will turn freely. If you cross the air lines, you could drive away but you wouldn’t have trailer brakes. ***This would be very dangerous.*** Always test the trailer brakes before driving with the hand valve or by pulling the air supply (tractor protection valve) control. Pull gently against them in a low gear to make sure the brakes work.

Trailer Air Tanks

Each trailer and converter dolly has one or more air tanks. They are filled by the ***emergency (supply) line*** from the tractor. They provide the air pressure used to operate trailer brakes. Air pressure is sent from the air tanks to the brakes by relay valves. The pressure in the ***service line*** tells how much pressure the relay valves should send to the trailer brakes. The pressure in the service line is controlled by the brake pedal (and the trailer hand brake).

It is important that you don’t let water and oil build up in the air tanks. If you do, the brakes may not work correctly. Each tank has a drain valve on it and you should drain each tank every day. If your tanks have automatic drains, they will keep most moisture out. But you should still open the drains to make sure.

Shut-Off Valves

Shut-off valves (also called cut-out cocks) are used in the service and supply air lines at the back of trailers used to tow other trailers. These valves permit closing the air lines off when another trailer is not being towed. You must check that all shut-off valves are in the ***open*** position except the ones at the back of the last trailer, which must be ***closed***.

Trailer Service, Parking and Emergency Brakes

Newer trailers have spring brakes just like trucks and truck tractors. However, converter dollies and trailers built before 1975 are not required to have spring brakes. Those that do not have spring brakes have emergency brakes which work from the air stored in the trailer air tank. The emergency brakes come on whenever air pressure in the emergency line is lost. ***These trailers have no parking brake***. The emergency brakes come on whenever the air supply knob is pulled out or the trailer is disconnected. But the brakes will hold on only as long as there is air pressure in the trailer air tank. Eventually, the air will leak away and then there will be no brakes. Therefore, i***t is very important for safety that you use wheel chocks when you park trailers without spring brakes***.

A major leak in the ***emergency*** line will cause the tractor protection valve to close and the trailer emergency brakes to come on.

You may not notice a major leak in the service line until you try to put the brakes on. Then, the air loss from the leak will lower the air tank pressure quickly. If it goes low enough, the trailer emergency brakes will come on.

Test Your Knowledge

1. Why should you not use the trailer hand valve while driving?
2. Describe what the trailer air supply control does.
3. Describe what the service line is for.
4. What is the emergency air line for?
5. Why should you use chocks when parking a trailer without spring brakes?
6. Where are shut-off valves?

These questions may be on the test. If you can't answer them all, re-read Section 6.2.

6.3 Coupling and Uncoupling

Knowing how to couple and uncouple correctly is basic to safe operation of combination vehicles. Wrong coupling and uncoupling can be very dangerous. General coupling and uncoupling steps are listed below. There are differences between different rigs, so learn the details of coupling and uncoupling the truck(s) you will operate.

Coupling Tractor–Semitrailers

Step 1. Inspect Fifth Wheel

✓ Check for damaged/missing parts.

✓ Check to see that mounting to tractor is secure, no cracks in frame, etc.

✓ Be sure that the fifth wheel plate is greased as required. Failure to keep the fifth wheel plate lubricated could cause steering problems because of friction between the tractor and trailer.

✓ Check if fifth wheel is in proper position for coupling.

- Wheel tilted down towards rear of tractor.
- Jaws open.
- Safety unlocking handle in the automatic lock position.

✓ If you have a sliding fifth wheel, make sure it is locked.

✓ Make sure the trailer kingpin is not bent or broken.

Step 2. Inspect Area and Chock Wheels

✓ Make sure area around the vehicle is clear.

✓ Be sure trailer wheels are chocked or spring brakes are on.

✓ Check that cargo (if any) is secured against movement due to tractor being coupled to the trailer.

Step 3. Position Tractor

✓ Put the tractor directly in front of the trailer. (Never back under the trailer at an angle because you might push the trailer sideways and break the landing gear.)

✓ Check position, using outside mirrors, by looking down both sides of the trailer.

Step 4. Back Slowly

✓ Back until fifth wheel just touches the trailer.

✓ Don't hit the trailer.

Step 5. Secure Tractor.

✓ Put on the parking brake.

✓ Put transmission in neutral.

Step 6. Check Trailer Height.

✓ The trailer should be low enough that it is raised slightly by the tractor when the tractor is backed under it. Raise or lower the trailer as needed. (If the trailer is too low, the tractor may strike and damage nose of the trailer; if the trailer is too high, ***it may not couple correctly***.)

✓ Check that the kingpin and fifth wheel are aligned.

Step 7. Connect Air Lines to Trailer.

✓ Check glad hand seals and connect tractor emergency air line to trailer emergency glad hand.

✓ Check glad hand seals and connect tractor service air line to trailer service glad hand.

✓ Make sure air lines are safely supported where they won't be crushed or caught while tractor is backing under the trailer.

Step 8. Supply Air to Trailer.

✓ From cab, push in "air supply" knob or move tractor protection valve control from the "emergency" to the "normal" position to supply air to the trailer brake system.

✓ Wait until the air pressure is normal.

✓ Check brake system for crossed air lines.

- Shut engine off so you can hear the brakes.

- Apply and release trailer brakes and listen for sound of trailer brakes being applied and released. You should hear the brakes move when applied and air escape when the brakes are released.
- Check air brake system pressure gauge for signs of major air loss.

✓ When you are sure the trailer brakes are working, start engine.

✓ Make sure air pressure is up to normal.

Step 9. Lock Trailer Brakes

✓ Pull out the "air supply" knob or move the tractor protection valve control from "normal" to "emergency."

Step 10. Back Under Trailer

✓ Use lowest reverse gear.

✓ Back tractor slowly under trailer to avoid hitting the kingpin too hard.

✓ Stop when the kingpin is locked into the fifth wheel.

Step 11. Check Connection for Security

✓ Raise trailer landing gear ***slightly*** off ground.

✓ Pull tractor ***gently*** forward while the trailer brakes are still locked to check that the trailer is locked onto the tractor.

Step 12. Secure Vehicle

✓ Put transmission in neutral.

✓ Put parking brakes on.

✓ Shut off engine and ***take key with you so someone else won't move truck while you are under it.***

Step 13. Inspect Coupling

✓ Use a flashlight, if necessary.

✓ Make sure there is ***no space between upper and lower fifth wheel***. If there is a space, something is wrong (kingpin may be on top of closed fifth wheel jaws; trailer would come loose very easily).

✓ Go under trailer and look into the back of the fifth wheel. Make sure the fifth wheel jaws have closed around the shank of the kingpin (see Figure 6-7).

✓ Check that the locking lever is in the "lock" position.

✓ Check that the safety latch is in position over locking lever. (On some fifth wheels the catch must be put in place by hand.)

✓ If the coupling isn't right, ***don't drive the coupled unit***; get it fixed.

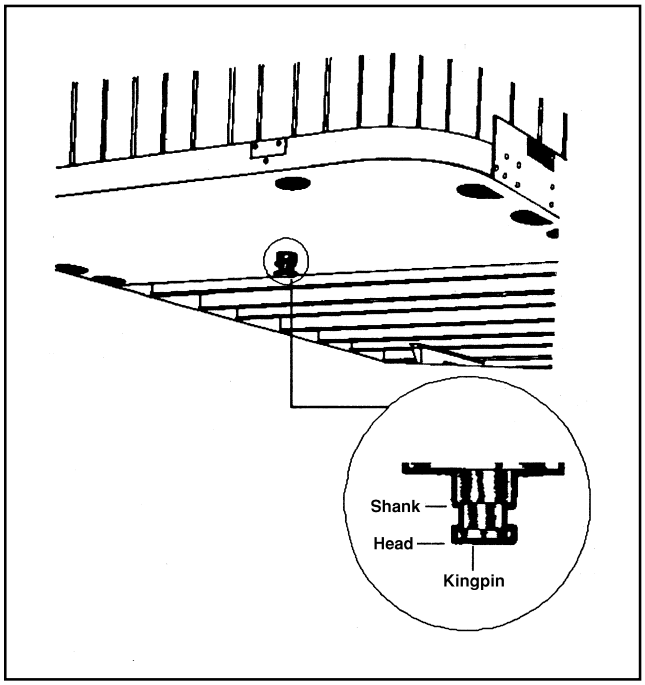

Figure 6-7

Trailer Kingpin

Step 14. Connect the Electrical Cord and Check Air Lines.

✓ Plug the electrical cord into the trailer and fasten the safety catch.

✓ Check both air lines and electrical line for signs of damage.

✓ Make sure air and electrical lines will not hit any moving parts of vehicle.

Step 15. Raise Front Trailer Supports (Landing Gear)

✓ Use low gear range (if so equipped) to begin raising the landing gear. Once free of weight, switch to the high gear range.

✓ Raise the landing gear all the way up. (Never drive with landing gear only part way up as it may catch on railroad tracks or other things.)

✓ After raising landing gear, secure the crank handle safely.

✓ When full weight of trailer is resting on tractor:

- Check for enough clearance between rear of tractor frame and landing gear. (When tractor turns sharply, it must not hit landing gear.)
- Check that there is enough clearance between the top of the tractor tires and the nose of the trailer.

Step 16. Remove Trailer Wheel Chocks

✓ Remove and store wheel chocks in a safe place.

Uncoupling Tractor–Semitrailers

The following steps will help you to uncouple safely:

Step 1. Position Rig

✓ Make sure surface of parking area can support weight of trailer.

✓ Have tractor lined up with the trailer. (Pulling out at an angle can damage landing gear.)

Step 2. Ease Pressure on Locking Jaws

✓ Shut off trailer air supply to lock trailer brakes.

✓ Ease pressure on fifth wheel locking jaws by backing up gently. (This will help you release the fifth wheel locking lever.)

✓ Put parking brakes on while tractor is pushing against the kingpin. (This will hold rig with pressure off the locking jaws.)

Step 3. Chock Trailer Wheels

✓ Chock the trailer wheels if the trailer doesn't have spring brakes or if you're not sure. (The air could leak out of the trailer air tank, releasing its emergency brakes. Without chocks, the trailer could move.)

Step 4. Lower the Landing Gear

✓ If the trailer is empty, lower the landing gear until it makes firm contact with the ground.

✓ If trailer is loaded, after the landing gear makes firm contact with the ground, turn crank in low gear a few extra turns. This will lift some weight off the tractor. (Do not lift trailer off the fifth wheel.) This will:

- Make it easier to unlatch the fifth wheel.
- Make it easier to couple next time.

Step 5. Disconnect Air Lines and Electrical Cable

✓ Disconnect air lines from trailer. Connect air line glad hands to dummy couplers at back of cab or couple them together. (See page 6-5 for more information about coupling glad hands.)

✓ Hang electrical cable with plug down to prevent moisture from entering it.

✓ Make sure lines are supported so they won't be damaged while driving the tractor.

Step 6. Unlock Fifth Wheel

✓ Raise the release handle lock.

✓ Pull the release handle to "open" position.

✓ Keep legs and feet clear of the rear tractor wheels to avoid serious injury in case the vehicle moves.

Step 7. Pull Tractor Partially Clear of Trailer

✓ Pull tractor forward until fifth wheel comes out from under the trailer.

✓ Stop the tractor frame under trailer (prevents trailer from falling to ground if landing gear should collapse or sink).

Step 8. Secure Tractor

✓ Apply parking brake.

✓ Place transmission in neutral.

Step 9. Inspect Trailer Supports.

✓ Make sure ground is supporting trailer.

✓ Make sure landing gear is not damaged.

Step 10. Pull Tractor Clear of Trailer

✓ Release parking brakes.

✓ Check the area and drive tractor forward until it clears.

Test Your Knowledge

1. What might happen if the trailer is too high when you try to couple?
2. After coupling, how much space should be between the upper and lower fifth wheel?
3. You should look into the back of the fifth wheel to see if it is locked onto the kingpin. True or False?
4. To drive you need to raise the landing gear only until it just lifts off the pavement. True or False?
5. How do you check an air brake system for crossed air lines?

These questions may be on the test. If you can't answer them all, re-read Section 6.3.

6.4 Inspecting a Combination Vehicle

Use the seven-step inspection procedure described in Section 2 to inspect your combination vehicle. There are more things to inspect on a combination vehicle than on a single vehicle. (For example, tires, wheels, lights, reflectors, etc.) However, there are also some new things to check. These are discussed below:

Additional Things to Check During a Walk-around Inspection

Do these checks in addition to those already listed in Section 2, “Step 5: Do Walk-around Inspection.”

Coupling System Areas

✓ Check fifth wheel (lower).

- Securely mounted to frame.
- No missing, damaged parts.
- Enough grease.
- No visible space between upper and lower fifth wheel.
- Locking jaws around the shank, not the head of the kingpin.
- Release arm properly seated and safety latch/lock engaged.

✓ Fifth wheel (upper).

- Glide plate securely mounted to trailer frame.
- Kingpin not damaged.

✓ Air and electric lines to trailer.

- Electrical cord firmly plugged in and secured.
- Air lines properly connected to glad hands, no air leaks, properly secured with enough slack for turns.
- All lines free from damage.

✓ Sliding fifth wheel.

- Slide not damaged or parts missing.
- Properly greased.
- All locking pins present and locked in place.
- If air powered — no air leaks.
- Check that fifth wheel is not so far forward that tractor frame will hit landing gear or the cab hit the trailer during turns.

Landing Gear

✓ Fully raised, no missing parts, not bent or otherwise damaged.

✓ Crank handle in place and secured.

✓ If power operated, no air or hydraulic leaks.

Combination Vehicle Brake Check

Do these checks ***in addition*** to Section 5.3, Inspecting Air Brake Systems.

The following section explains how to check air brakes on combination vehicles. Check the brakes on a double or triple trailer as you would any combination vehicle.

Check That Air Flows to All Trailers. Use the tractor parking brake and/or chock the wheels to hold the vehicle. Wait for air pressure to reach normal, then push in the red "trailer air supply" knob. This will supply air to the emergency (supply) lines. Use the trailer hand brake to provide air to the service line. Go to the rear of the rig. Open the emergency line shut-off valve at the rear of the last trailer. You should hear air escaping, showing the entire system is charged. Close the emergency line valve. Open the service line valve to check that service pressure goes through all the trailers (this test assumes that the trailer handbrake or the service brake pedal is on), then close the valve. If you do ***NOT*** hear air escaping from both lines, check that the shut-off valves on the trailer(s) and dolly(ies) are in the ***OPEN*** position. You ***MUST*** have air all the way to the back for all the brakes to work.

Test Tractor Protection Valve. Charge the trailer air brake system. (That is, build up normal air pressure and push the "air supply" knob in). Shut the engine off. Step on and off the brake pedal several times to reduce the air pressure in the tanks. The trailer air supply control (also called the tractor protection valve control) should pop out (or go from "normal" to "emergency" position) when the air pressure falls into the pressure range specified by the manufacturer (usually within the range of 20 to 45 psi).

If the tractor protection valve doesn't work right, an air hose or trailer brake leak could drain all the air from the tractor. This would cause the emergency brakes to come on, with possible loss of control.

Test Trailer Emergency Brakes. Charge the trailer air brake system and check that the trailer rolls freely. Then stop and pull out the trailer air supply control (also called tractor protection valve control or trailer emergency valve) or place it in the "emergency" position. Pull gently on the trailer with the tractor to check that the trailer emergency brakes are on.

Test Trailer Service Brakes. Check for normal air pressure, release the parking brakes, move the vehicle forward slowly, and apply trailer brakes with the hand control (trolley valve), if so equipped. You should feel the brakes come on. This tells you the trailer brakes are connected and working. (The trailer brakes should be tested with the hand valve but controlled in normal operation with the foot pedal, which applies air to the service brakes at all wheels.)

Test Your Knowledge

1. Which shut-off valves should be open and which closed?
2. How can you test that air flows to all trailers?
3. How can you test the tractor protection valve?
4. How can you test the trailer emergency brakes?
5. How can you test the trailer service brakes?

These questions may be on the test. If you can't answer them all, re-read Section 6.4.

Section 7: Doubles and Triples
For drivers towing double or triple trailers

This Section Covers

- ✓ Pulling Double/Triple Trailers
- ✓ Coupling and Uncoupling
- ✓ Inspecting Doubles and Triples
- ✓ Check Air Brakes

This section has information you need to pass the CDL knowledge test for driving safely with double and triple trailers. It tells about how important it is to be very careful when driving with more than one trailer, how to couple and uncouple correctly, and of inspecting doubles and triples carefully. (You should also study Sections 2, 5 and 6.)

7.1 Pulling Double/Triple Trailers

Take special care when pulling two and three trailers. There are more things that can go wrong, and doubles/triples are less stable than other commercial vehicles. Some areas of concern are discussed below:

Prevent Trailers From Rolling Over

To prevent trailers from rolling over, you must steer gently and go slowly around corners, on-ramps, off-ramps, and curves. A safe speed on a curve for a straight truck or a single trailer combination vehicle may be too fast for a set of doubles or triples.

Beware of the Crack-the-whip Effect

Doubles and triples are more likely to turn over than other combination vehicles because of the “crack-the-whip” effect. You must steer gently when pulling trailers. The last trailer in a combination is most likely to turn over. If you don’t understand the crack-the-whip effect, study Section 6.1 and review Figure 6-1 in the combination vehicles section of this manual.

Inspect Completely

There are more critical parts to check when you have two or three trailers. Check them all. Follow the procedures described later in this section.

Look Far Ahead

Doubles and triples must be driven very smoothly to avoid rollover or jackknife. Therefore, look far ahead so you can slow down or change lanes gradually when necessary.

Manage Space

Doubles and triples take up more space than other commercial vehicles. They are not only longer, but also need more space because they can’t be turned or stopped suddenly. Allow more following distance. Make sure you have large enough gaps before entering or crossing traffic. Be certain you are clear at the sides before changing lanes.

Adverse Conditions

Be more careful in adverse conditions. In bad weather, slippery conditions, and mountain driving, you must be especially careful if you drive double and triple bottoms. You will have greater length and more dead axles to pull with your drive axles than other drivers. There is more chance for skids and loss of traction.

7.2 Coupling and Uncoupling

Knowing how to couple and uncouple correctly is basic to safe operation of doubles and triples. Wrong coupling and uncoupling can be very dangerous. Coupling and uncoupling steps for doubles and triples are listed below:

Coupling Twin Trailers

Secure Second (Rear) Trailer

✓ If the second trailer doesn't have spring brakes, drive the tractor close to the trailer, connect the emergency line, charge the trailer air tank, and disconnect the emergency line. This will set the trailer emergency brakes (if the slack adjusters are correctly adjusted). Chock the wheels if you have any doubts about the brakes.

Couple tractor and first semitrailer as described earlier.

Caution: For the safest handling on the road, the more heavily loaded semitrailer should be in first position behind the tractor. The lighter trailer should be in the rear.

A converter gear or dolly is a coupling device of one or two axles and a fifth wheel by which a semi-trailer can be coupled to the rear of a tractor-trailer, combination forming a double bottom rig.

Position Converter Dolly in Front of Second (Rear) Trailer

✓ Release dolly brakes by opening the air tank petcock. (Or, if the dolly has spring brakes, use the dolly parking brake control.)

✓ If the distance is not too great, wheel the dolly into position by hand so it is in line with the kingpin.

✓ Or, use the tractor and first semitrailer to pick up the converter dolly:

- Position combination as close as possible to converter dolly.
- Move dolly to rear of first semitrailer and couple it to the trailer.
- Lock pintle hook.
- Secure dolly support in raised position.
- Pull dolly into position as close as possible to nose of the second semitrailer.
- Lower dolly support.
- Unhook dolly from first trailer.
- Wheel dolly into position in front of second trailer in line with the kingpin.

Connect Converter Dolly to Front Trailer

✓ Back first semitrailer into position in front of dolly tongue.

✓ Hook dolly to front trailer:

- Lock pintle hook.
- Secure converter gear support in raised position.

Connect Converter Dolly to Rear Trailer

- ✓ Make sure trailer brakes are locked and/or wheels chocked.
- ✓ Make sure trailer height is correct. (It must be slightly lower than the center of the fifth wheel, so trailer is raised slightly when dolly is pushed under.)
- ✓ Back converter dolly under rear trailer.
- ✓ Raise landing gear slightly off ground to prevent damage if trailer moves.
- ✓ Test coupling by pulling against pin of number two semitrailer.
- ✓ Make visual check of coupling. (No space between upper and lower fifth wheel. Locking jaws closed on kingpin.)
- ✓ Connect safety chains, air hoses, and light cords.
- ✓ Close converter dolly air tank petcock and shut-off valves at rear of second trailer (service and emergency shut-offs).
- ✓ Open shut-off valves at rear of first trailer (and on dolly if so equipped).
- ✓ Raise landing gear completely.
- ✓ Charge trailers (push “air supply” knob in) and check for air at rear of second trailer by opening the emergency line shut-off. If air pressure isn’t there, something is wrong and the brakes won’t work.

Uncoupling Twin Trailers

Uncouple Rear Trailer

- ✓ Park rig in a straight line on firm level ground.
- ✓ Apply parking brakes so rig won’t move.
- ✓ Chock wheels of second trailer if it doesn’t have spring brakes.
- ✓ Lower landing gear of second semitrailer enough to remove some weight from dolly.
- ✓ Close air shut-offs at rear of first semitrailer (and on dolly if so equipped).
- ✓ Disconnect all dolly air and electric lines and secure them.
- ✓ Release dolly brakes.
- ✓ Release converter dolly fifth wheel latch.
- ✓ Slowly pull tractor, first semitrailer, and dolly forward to pull dolly out from under rear semitrailer.

Uncouple Converter Dolly

- ✓ Lower dolly landing gear.
- ✓ Disconnect safety chains.
- ✓ Apply converter gear spring brakes or chock wheels.
- ✓ Release pintle hook on first semi-trailer.
- ✓ Slowly pull clear of dolly.

Caution: Never unlock the pintle hook with the dolly still under the rear trailer. The dolly tow bar may fly up, possibly causing injury and making it very difficult to re-couple.

Coupling and Uncoupling Triple Trailers

Couple Second and Third Trailers

✓ Couple second and third trailers using the method for coupling doubles.

✓ Uncouple tractor and pull away from second and third trailers.

Couple Tractor/First Semitrailer to Second/Third Trailers

✓ Couple tractor to first trailer. Use the method already described for coupling tractor-semitrailers.

✓ Move converter dolly into position and couple first trailer to second trailer using the method for coupling doubles. Triples rig is now complete.

Uncouple Triple-trailer Rig

✓ Uncouple third trailer by pulling the dolly out, then unhitching the dolly using the method for uncoupling doubles.

✓ Uncouple remainder of rig as you would any double-bottom rig using the method already described.

Coupling and Uncoupling Other Combinations

The methods described so far apply to the more common tractor-trailer combinations. However, there are other ways of coupling and uncoupling the many types of truck-trailer and tractor-trailer combinations that are in use. There are too many to cover in this manual. Learn the right way to couple the vehicle(s) you will drive according to the manufacturer and/or owner.

7.3 Inspecting Doubles and Triples

Use the seven-step inspection procedure described in Section 2 to inspect your combination vehicle. There are more things to inspect on a combination vehicle than on a single vehicle. Many of these items are simply more of what you would find on a single vehicle (for example, tires, wheels, lights, reflectors, etc.). However, there are also some new things to check. These are discussed below.

Additional Things to Check During a Walk-around Inspection

Coupling System Areas

✓ Check fifth wheel (lower):

- Securely mounted to frame.
- No missing, damaged parts.
- Enough grease.
- No visible space between upper and lower fifth wheel.
- Locking jaws around the shank, **not** the head of kingpin.
- Release arm properly seated and safety latch/lock engaged.

✓ Fifth wheel (upper):

- Glide plate securely mounted to trailer frame.
- Kingpin not damaged.

✓ Air and electric lines to trailer:

- Electrical cord firmly plugged in and secured.
- Air lines properly connected to glad hands, no air leaks, properly secured with enough slack for turns.
- All lines free from damage.

✓ Sliding fifth wheel:

- Slide not damaged or parts missing.
- Properly greased.
- All locking pins present and locked in place.
- If air powered — no air leaks.
- Check that fifth wheel is not so far forward that tractor frame will hit landing gear, or cab hit the trailer, during turns.

Landing Gear

✓ Fully raised, no missing parts, not bent or otherwise damaged.

✓ Crank handle in place and secured.

✓ If power operated, no air or hydraulic leaks.

Double and Triple Trailers

✓ Shut-off valves (at rear of trailers, in service and emergency lines):

- Rear of front trailers: OPEN.
- Rear of last trailer: CLOSED.
- Converter dolly air tank drain valve: CLOSED.

✓ Be sure air lines are supported and glad hands are properly connected.

✓ If spare tire is carried on converter gear (dolly), make sure it's secured.

✓ Be sure pintle-eye of dolly is in place in pintle hook of trailer(s).

✓ Make sure pintle hook is latched.

✓ Safety chains should be secured to trailer(s).

✓ Be sure light cords are firmly in sockets on trailers.

Do these checks in addition to Section 5.3, "Inspecting Air Brake Systems."

7.4 Doubles/Triples Air Brake Check

Check the brakes on a double or triple trailer as you would any combination vehicle. Section 6.2 explains how to check air brakes on combination vehicles. You must also make the following checks on your double or triple trailers:

Check That Air Flows to All Trailers (Double and Triple Trailers)

Use the tractor parking brake and/or chock the wheels to hold the vehicle. Wait for air pressure to reach normal, then push in the red "trailer air supply" knob. This will supply air to the emergency (supply) lines. Use the trailer hand brake to provide air to the service line. Go to the rear of the rig. Open the emergency line shut-off valve at the rear of the last trailer. You should hear air escaping, showing the entire system is charged. Close the emergency line valve. Open the service line valve to check that service pressure goes through all the trailers (this test assumes that the trailer hand brake or the service brake pedal is on), then close the valve. If you do ***NOT*** hear air escaping from both lines, check that the shut-off valves on the trailer(s) and dolly(ies) are in the ***OPEN*** position. You ***MUST*** have air all the way to the back for all the brakes to work.

Test Tractor Protection Valve

Charge the trailer air brake system. (That is, build up normal air pressure and push the "air supply" knob in.) Shut the engine off. Step on and off the brake pedal several times to reduce the air pressure in the tanks. The trailer air supply control (also called the tractor protection valve control) should pop out (or

go from “normal” to “emergency” position) when the air pressure falls into the pressure range specified by the manufacturer (usually within the range of 20 to 45 psi).

If the tractor protection doesn’t work right, an air hose or trailer brake leak could drain all the air from the tractor. This would cause the emergency brakes to come on, with possible loss of control.

Test Trailer Emergency Brakes

Charge the trailer air brake system and check that the trailer rolls freely. Then stop and pull out the trailer air supply control (also called tractor protection valve control or trailer emergency valve) or place it in the “emergency” position. Pull gently on the trailer with the tractor to check that the trailer emergency brakes are on.

Test Trailer Service Brakes

Check for normal air pressure, release the parking brakes, move the vehicle forward slowly, and apply trailer brakes with the hand control (trolley valve), if so equipped. You should feel the brakes come on. This tells you the trailer brakes are connected and working. (The trailer brakes should be tested with the hand valve, but controlled in normal operation with the foot pedal, which applies air to the service brakes at all wheels.)

Test Your Knowledge

1. What is a converter dolly?
2. Do converter dollies have spring brakes?
3. What three methods can you use to secure a second trailer before coupling?
4. How do you check to make sure trailer height is correct before coupling?
5. What do you check when making a visual check of coupling?
6. Why should you pull a dolly out from under a trailer before you disconnect it from the trailer in front?
7. What should you check for when inspecting the converter dolly? The pintle hook?
8. Should the shut-off valves on the rear of the last trailer be open or closed? On the first trailer in a set of doubles? On the middle trailer of a set of triples?
9. How can you test that air flows to all trailers?

These questions may be on the test. If you can’t answer them all, re-read Sections 7.1, 7.2, 7.3, and 7.4.

Section 8: Tank Vehicles
For drivers driving tank vehicles

This Section Covers

✓ Inspecting Tank Vehicles

✓ Driving Tank Vehicles

This section has information needed to pass the CDL knowledge test for driving a tank vehicle. (You should also study Section 2, 5, and 6). A “tank vehicle” is used to carry any liquid or liquid gas in a permanently mounted cargo tank rated at 119 gallons or more or a portable cargo tank rated at 1,000 gallons or more.

Before loading, unloading, or driving a tanker, inspect the vehicle. This makes sure that the vehicle is safe to carry the liquid or gas and is safe to drive.

8.1 Inspecting Tank Vehicles

Tank vehicles have special items that you need to check. Tank vehicles come in many types and sizes. You need to check the vehicle’s Operator’s Manual to make sure you know how to inspect your tank vehicle.

Leaks

On all tank vehicles, the most important item to check for is leaks. Check under and around the vehicle for signs of any leaking. Don’t carry liquids or gases in a leaking tank. In general, check the following:

✓ Check the tank’s body or shell for dents or leaks.

✓ Check the intake, discharge, and cut-off valves. Make sure the valves are in the correct position before loading, unloading, or moving a vehicle.

✓ Check pipes, connections, and hoses for leaks, especially around joints.

✓ Check manhole covers and vents. Make sure the covers have gaskets and they close correctly. Keep the vents clear so they work correctly.

✓ Check special purpose equipment. If your vehicle has any of the following equipment, make sure it works:

- Vapor recovery kits.
- Grounding and bonding cables.
- Emergency shut-off systems.
- Built in fire extinguisher.

Make sure you know how to operate your special equipment.

✓ Check the emergency equipment required for your vehicle. Find out what equipment you’re required to carry and make sure you have it (and it works).

8.2 Driving Tank Vehicles

Hauling liquids in tanks requires special skills because of the high center of gravity and liquid movement.

High Center of Gravity

High center of gravity means that much of the load's weight is carried high up off the road. This makes the vehicle top-heavy and easy to roll over. Liquid tankers are especially easy to roll over. Tests have shown that tankers can turn over at the speed limits posted for curves. Take highway curves and on-ramp/off-ramp curves well below the posted speeds.

Danger of Surge

Liquid surge results from movement of the liquid in partially filled tanks. This movement can have bad effects on handling. For example, when coming to a stop, the liquid will surge back and forth. When the wave hits the end of the tank, it tends to push the truck in the direction the wave is moving. If the truck is on a slippery surface such as ice, the wave can shove a stopped truck out into an intersection. The driver of a liquid tanker must be very familiar with the handling of the vehicle.

Bulkheads

Some liquid tanks are divided into several small tanks by bulkheads. When loading and unloading the smaller tanks, the driver must pay attention to weight distribution. Don't put too much weight on the front or rear of the vehicle.

Baffled Tanks

Baffled liquid tanks have bulkheads in them with holes that let the liquid flow through. The baffles help to control the forward and backward liquid surge. Side-to-side surge can still occur. This can cause a roll over.

Unbaffled Tanks

Unbaffled liquid tankers (sometimes called "smooth bore" tanks) have nothing inside to slow down the flow of the liquid. Therefore, forward-and-backward surge is very strong. Unbaffled tanks are usually those that transport food products (milk, for example). (Sanitation regulations forbid the use of baffles because of the difficulty in cleaning the inside of the tank.) Be extremely cautious (slow and careful) in driving smooth bore tanks, especially when starting and stopping.

Outage

Never load a cargo tank totally full. Liquids expand as they warm and you must leave room for the expanding liquid. This is called "outage." Since different liquids expand by different amounts, they require different amounts of outage. You must know the outage requirement when hauling liquids in bulk.

How Much to Load?

A full tank of dense liquid (such as some acids) may exceed legal weight limits. For that reason, you may often only partially fill tanks with heavy liquids. The amount of liquid to load into a tank depends on:

- ✓ The amount the liquid will expand in transit.
- ✓ The weight of the liquid.
- ✓ Legal weight limits.

8.3 Safe Driving Rules

In order to drive tank vehicles safely, you must remember to follow all the safe driving rules. A few of these rules are:

Drive Smoothly

✓ Drive smoothly. Because of the high center of gravity and the surge of the liquid, you must start, slow down, and stop very smoothly. Also, make smooth turns and lane changes.

Braking

✓ If you must make a quick stop to avoid a crash, use controlled or stab braking. If you do not remember how to stop using these methods, review Section 2.13. Also, remember that if you steer quickly while braking, your vehicle may roll over.

Curves

✓ Slow down before curves, then accelerate slightly through the curve. The posted speed for a curve may be too fast for a tank vehicle.

Stopping Distance

✓ Keep in mind how much space you need to stop your vehicle. Remember that wet roads double the normal stopping distance. Empty tank vehicles may take longer to stop than full ones.

Skids

✓ Don't over steer, over accelerate, or over brake. If you do, your vehicle may skid. On tank trailers, if your drive wheels or trailer wheels begin to skid, your vehicle may jackknife. When any vehicle starts to skid, you must take action to restore traction to the wheels.

Test Your Knowledge

1. How are ***bulkheads*** different than ***baffles***?
2. Should a tank vehicle take curves, on-ramps, or off-ramps at the posted speed limits?
3. How are smooth bore tankers different to driver than those with baffles?
4. What three things determine how much liquid you can load?
5. What is outage?
6. What two reasons make special care necessary when driving tank vehicles?

These questions may be on the test. If you can't answer them all, re-read Section 8.2.

Section 9: Hazardous Materials
For drivers hauling hazardous materials in amounts requiring placards

This Section Covers

- ✓ The Intent of the Regulations
- ✓ Driver Responsibilities
- ✓ Communications Rules
- ✓ Loading and Unloading
- ✓ Bulk Tank Loading, Unloading, and Marking
- ✓ Driving and Parking Rules
- ✓ Emergencies

Hazardous materials are products that pose a risk to health, safety, and property during transportation. The term often is shortened to HAZMAT, which you may see on road signs, or to HM in government regulations. Hazardous materials include explosives, various types of gases, solids, flammable and combustible liquids, and other materials. Because of the risks involved and the potential consequences these risks impose, the handling of hazardous materials is very heavily regulated by all levels of government.

The Hazardous Materials Regulations (HMR) are found in parts 100-185 of title 49 of the Code of Federal Regulations. The common reference for these regulations is 49 CFR Parts 100-185.

The Hazardous Materials Table in these regulations contains a list of these items. However, this list is not all-inclusive. Whether or not a material is considered hazardous is based on its characteristics and the shipper's decision on whether or not the material meets a definition of a hazardous material in the regulations.

The regulations require vehicles transporting certain types or quantities of hazardous materials to display diamond-shaped, square-on-point, warning signs called placards.

This section is designed to assist you in understanding your role and responsibilities in hauling hazardous materials. Due to the constantly changing nature of government regulations, it is impossible to guarantee absolute accuracy of the materials in this section. An up-to-date copy of the complete regulations is essential for you to have. Included in these regulations is a complete glossary of terms.

You must have a commercial driver license (CDL) with a hazardous materials endorsement before driving vehicles carrying hazardous materials which require placards. You must pass a written test about the regulations and requirements to get this endorsement.

Everything you need to know to pass the written test is in this section. However, this is only a beginning. Most drivers need to know much more on the job. You can learn more by reading and understanding the federal and state rules applicable to hazardous materials a well as attending hazardous materials training courses. These courses are usually offered by your employer, colleges and universities, and various associations. You can get copies of the Federal Regulations (49 CFR) through your local Government Printing Office bookstore and various industry publishers. Union or company offices often have copies of the rules for driver use. Find out where you can get your own copy to use on the job.

The regulations require training and testing for all drivers involved in transporting hazardous materials. Your employer or a designated representative is required to provide this training and testing. Hazardous materials employers are required to keep a record of that training on each employee as long as that employee is working with hazardous materials, and for 90 days thereafter. The regulations require that hazardous materials employees be trained and tested at least once every three years.

The regulations also require that drivers have special training before driving a vehicle transporting certain flammable gas materials or highway route controlled quantities of radioactive materials. In addition, drivers transporting cargo tanks and portable tanks must receive specialized training. Each driver's employer or a designated representative must provide such training.

Some locations require permits to transport certain explosives or bulk hazardous wastes. States and counties also may require drivers to follow special hazardous materials routes. The federal government may require permits or exemptions for special hazardous materials cargo such as rocket fuel. Find out about permits, exemptions, and special routes for places you drive.

9.1 The Intent of the Regulations

Contain the Material

Transporting hazardous materials can be risky. The regulations are intended to protect you, those around you, and the environment. They tell shippers how to package the materials safely and drivers how to load, transport, and unload the material. These are called "containment rules."

Communicate the Risk

To communicate the risk, shippers must warn drivers and others about the material's hazards. The regulations require shippers to put hazard warning labels on packages, provide proper shipping papers, emergency response information, and placards. These steps communicate the hazard to the shipper, the carrier, and the driver.

Assure Safe Drivers and Equipment

In order to get a hazardous materials endorsement on a CDL, you must pass a written test about transporting hazardous materials. To pass the test, you must know how to:

✓ Identify what are hazardous materials.

✓ Safely load shipments.

✓ Properly placard your vehicle in accordance with the rules.

✓ Safely transport shipments.

Learn the rules and follow them. Following the rules reduces the risk of injury from hazardous materials. Taking shortcuts by breaking rules is unsafe. Rule breakers can be fined and put in jail.

Inspect your vehicle before and during each trip. Law enforcement officers may stop and inspect your vehicle. When stopped, they may check your shipping papers, vehicle placards, the hazardous materials endorsement on your driver license, and your knowledge of hazardous materials.

9.2 Hazardous Materials Transportation — Who Does What

The Shipper

✓ Sends products from one place to another by truck, rail, vessel, or airplane.

✓ Uses the hazardous materials regulations to determine the product's:

- Proper shipping name
- Hazard class
- Identification number
- Correct packaging

- Correct label and markings
- Correct placards

✓ Must package, mark, and label the materials; prepare shipping papers; provide emergency response information; and supply placards.

✓ Certify on the shipping paper that the shipment has been prepared according to the rules (unless you are pulling cargo tanks supplied by you or your employer).

The Carrier

✓ Takes shipment from the shipper to its destination.

✓ Prior to transportation, check that the shipper correctly described, marked, labeled, and otherwise prepared the shipment for transportation.

✓ Refuses improper shipments.

✓ Reports accidents and incidents involving hazardous materials to the proper government agency.

The Driver

✓ Makes sure the shipper has identified, marked, and labeled the hazardous materials properly.

✓ Refuses leaking packages and shipments.

✓ Placards his vehicle when loading, if required.

✓ Safely transports the shipment without delay.

✓ Follows all special rules about transporting hazardous materials.

✓ Keeps hazardous materials shipping papers and emergency response information in the proper place.

9.3 Communication Rules

Definitions

Some words and phrases have special meanings when talking about hazardous materials. Some of these may differ from meanings you are used to. The words and phrases in this section may be on your test. The meanings of other important words are in the glossary at the end of Section 9.

A material's hazard class reflects the risks associated with it. There are nine different hazard classes. Figure 9-1 tells the exact meaning of each hazard class. The types of materials included in these nine classes are in the table on next page.

A ***shipping paper*** describes the hazardous materials being transported. Shipping orders, bills of lading, and manifests are all shipping papers. Figure 9-6 shows an example of a shipping paper.

After an accident or hazardous materials spill or leak, you may be injured and unable to communicate the hazards of the materials you are transporting. Firefighters and police can prevent or reduce the amount of damage or injury at the scene if they know what hazardous materials are being carried. Your life, and the lives of others, may depend of quickly locating the hazardous materials shipping papers. For that reason the rules:

✓ Require shippers to describe hazardous materials correctly and include an emergency response telephone number on shipping papers.

✓ Require carriers and drivers to put tabs on hazardous materials shipping papers, or keep them on top of other shipping papers and keep the required emergency response information with the shipping papers.

Class	Division	Name of Class or Division	Example
1	1.1 1.2 1.3 1.4 1.5 1.6	Mass Explosives Projection Hazards Mass Fire Hazards Minor Hazards Very Insensitive Extremely Insensitive	Dynamite Flares Display Fireworks Ammunition Blasting Agents Explosive Devices
2	2.1 2.2 2.3	Flammable Gases Non-Flammable Gases Poisonous/Toxic Gases	Propane Helium Fluorine, Compressed
3	—	Flammable Liquids	Gasoline
4	4.1 4.2 4.3	Flammable Solids Spontaneously Combustible Spontaneously Combustible When Wet	Ammonium Picrate, Wetted White Phosphorus Sodium
5	5.1 5.2	Oxidizers Organic Peroxides	Ammonium Nitrate Methyl Ethyl Ketone Peroxide
6	6.1 6.2	Poison (Toxic Material) Infectious Substances	Potassium Cyanide Anthrax Virus
7	—	Radioactive	Uranium
8	—	Corrosives	Battery Fluid
9	—	Miscellaneous Hazardous Materials	Polychlorinated Biphenyls (PCB)
None	—	ORM-D (Other Regulated Material–Domestic)	Food Flavorings, Medicines
None	—	Combustible Liquids	Fuel Oil

Figure 9-1

Hazardous Materials Hazard Class/Division Table

✓ Require drivers to keep hazardous materials shipping papers:

- In a pouch on the driver's door, or
- In clear view within immediate reach while the seat belt is fastened while driving, or
- On the driver's seat when out of the vehicle.

Package Labels

Shippers put diamond-shaped hazard warning labels on most hazardous materials packages. These labels inform others of the hazard. If the diamond label won't fit on the package, shippers may put the label on a tag securely attached to the package. For example, compressed gas cylinders that will not hold a label will have tags or decals. Labels look like the example in Figure 9-2.

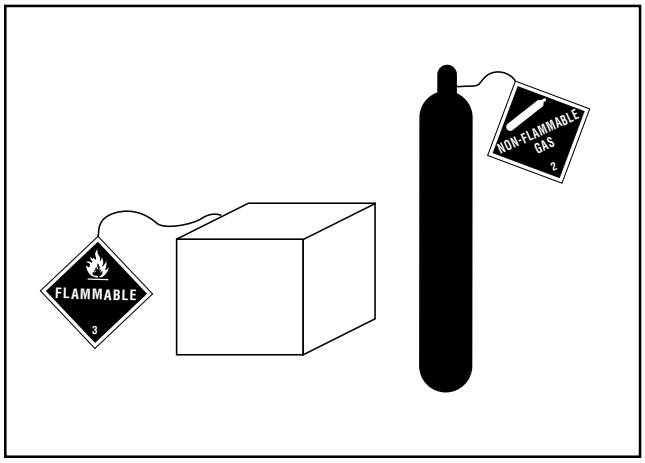

Figure 9-2

Example of Labels

Lists of Regulated Products

Placards are used to warn others of hazardous materials. Placards are signs put on the outside of a vehicle which identify the hazard class of the cargo. A placarded vehicle must have at least four identical placards. They are put on the front, rear, and both sides of the vehicle (See Figure 9-3). Placards must be readable from all four directions. They are 10 3/4 inches square, square-on-point, in a diamond shape. Cargo tanks and other bulk packaging display the identification number of their contents on placards or orange panels or white square-on-point displays similar to placards.

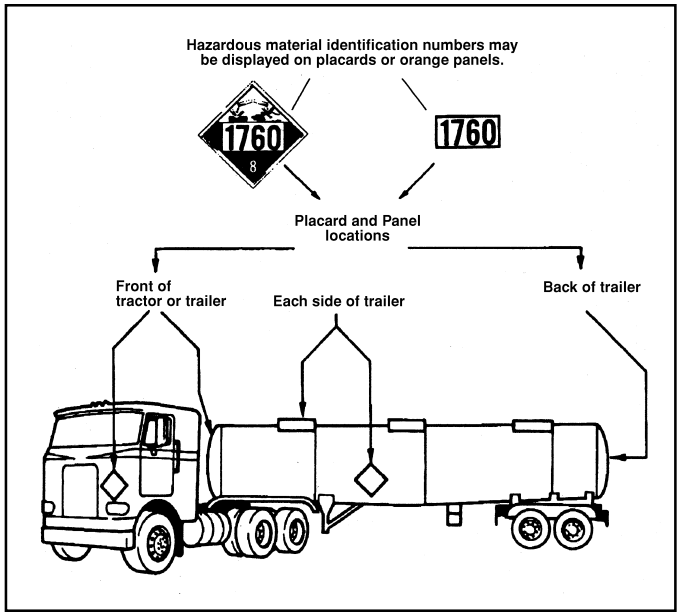

Figure 9-3

Placard and Panel Locations

There are three main lists used by shippers, carriers, and drivers when trying to identify hazardous materials. Before transporting a material, look for its name on three lists. Some materials are on all lists, others on only one. Always check:

- ✓ Section 172.101, the Hazardous Materials Table.
- ✓ Appendix A to Section 172.101, the List of Hazardous Substances and Reportable Quantities.
- ✓ Appendix B to Section 172.101, the List of Marine Pollutants.

The Hazardous Materials Table. Figure 9-4 shows part of the Hazardous Materials Table. Column 1 tells which shipping mode(s) the entry affects and the other information concerning the shipping description. The next five columns show each material's shipping name, hazard class or division, identification number, packaging group, and required labels.

Six different symbols may appear in Column 1 of the table.

(+) Shows the proper shipping name, hazard class, and packing group to use, even if the material doesn't meet the hazard class definition.

(A) Means the hazardous material described in Column 2 is subject to the HMR only when offered or intended for transport by air unless it is a hazardous substance or hazardous waste.

(W) Means the hazardous material described in Column 2 is subject to the HMR only when offered or intended for transportation by water unless it is a hazardous substance, hazardous waste, or marine pollutant.

(D) Means the proper shipping name is appropriate for describing materials for domestic transportation, but may not be proper for international transportation.

(I) Identifies a proper shipping name that is used to describe materials in international transportation. A different shipping name may be used when only domestic transportation is involved.

(G) Identifies a generic proper shipping name that requires a technical name to be displayed in association with it.

Column 2 lists the proper shipping names and descriptions of regulated materials. Entries are in alphabetical order so you can more quickly find the right entry. The table shows proper shipping names in regular type. The shipping paper must show proper shipping names. Names shown in *italics* are not proper shipping names.

Column 3 shows a material's hazard class or division, or the entry "Forbidden." Never transport a "Forbidden" material. You placard shipments based on the quantity and hazard class. You can decide which placards to use if you know these three things:

- ✓ Material's hazard class.
- ✓ Amount being shipped.

§ 172.101 Hazardous Materials Table									
Symbols	Hazardous Materials descriptions and proper shipping names	Hazard Class or Division	Identification Numbers	Packing Group	Label(s) required (if not excepted)	Special Provisions	(8) Packaging Authorizations (§ 173.***)		
							Exceptions	Non-bulk packaging	Bulk packaging
(1)	(2)	(3)	(4)	(5)	(6)	(7)	(8A)	(8B)	(8C)
——	Toxic, solids, self heating, n.o.s. . . .	6.1	UN3124	I	6.1, 4.2	A5_____	None	211	242

Figure 9-4

Part of the Hazardous Materials Table

✓ Amount of all hazardous materials of all classes on your vehicle.

Column 4 lists the identification number for each proper shipping name. Identification numbers are preceded by the letters “UN” or “NA.” The letters “NA” are associated with proper shipping names that are only used within the United States and to and from Canada. The identification number must appear on the shipping paper as part of the shipping description and also appear on the package. It also must appear on cargo tanks and other bulk packaging. Police and firefighters use this number to quickly identify the hazardous materials.

Column 5 shows the packing group assigned to a material.

Column 6 shows the hazard warning label(s) shippers must put on packages of hazardous materials. Some products require use of more than one label due to a dual hazard being present. No label is needed where the table shows the word NONE.

Spills of 10 pounds or more must be reported.

LIST OF HAZARDOUS SUBSTANCES AND REPORTABLE QUANTITIES – Continued		
Hazardous Substance	**Synonyms**	**Reportable Quantity (RQ) Pounds (Kilograms)**
Phenyl mercaptan @	Benzinethiol Thiophenol	100 (45.4)
Phenylmercuric acetate	Mercury, (acetato-0) phenyl	100 (45.4)
N-Phenylthiourea	Thiourea, phenyl	100 (45.4)
Phorate	Phosphorodithioic acid, O, O-diethyl, S-(ethylthio), methylester	10 (4.54)
Phosgene	Carbonyl chloride	10 (4.54)
Phosphine	Hydrogen Phosphide	100 (45.4)
Phosphoric acid		5000 (2270)
Phosphroic acid, diethyl 4-nitrophenyl ester	Diethyl-p nitrophenyl phosphate	100 (45.4)
Phosphoric acid, lead salt	Lead phosphate	1 (0.454)

Figure 9-5

List of Hazardous Substances

Column 7 lists the additional (special) provisions that apply to this material. When there is an entry in this column, you must refer to the federal regulations for specific information.

Column 8 is a three-part column showing the section numbers covering the packaging requirements for each hazardous material.

Note: Columns 9 and 10 do not apply to transportation by highway.

Appendix A to §172.101 – The List of Hazardous Substances and Reportable Quantities. The DOT and the EPA want to know about spills of ***hazardous substances***. They are named in the List of Hazardous Substances and Reportable Quantities (see Figure 9-5). Column 3 of the list shows each product's reportable quantity (RQ). When these materials are being transported in a reportable quantity or greater in one package, the shipper displays the letters RQ on the shipping paper and package. The letters RQ may appear before or after the basic description. You or your employer must report any spill of these materials which occurs in a ***reportable quantity***.

If the words INHALATION HAZARD appear on the shipping paper or package, the rules require display of the POISON or POISON GAS placards, as appropriate. These placards must be used in addition to other placards which may be required by the product's hazard class. Always display the hazard class placard and the POISON placard, even for small amounts.

Appendix B: Marine Pollutants — Appendix B is a listing of chemicals that are toxic to marine life. Unlike hazardous substances, there is no reportable quantity for Marine Pollutants. For highway transportation, Marine Pollutants are only regulated when transported in bulk packages. Any bulk package of a Marine Pollutant mut display the Marien Pollutant marking (white triangle with an "X" through a fish). This marking (not a placard) must be displayed on the outside of the vehicle and noted as a "Marine Pollutant" on the shipping papers.

Test Your Knowledge

1. Shippers package in order to (fill in the blank) the material.
2. Drivers placard their vehicle to (fill in the blank) the risk.
3. What three things do you need to know to decide which placards (if any) you need?
4. A hazardous materials identification number must appear on the (fill in the blank) and on the (fill in the blank). The identification number must also appear on cargo tanks and other bulk packagings.
5. Where must you keep shipping papers describing hazardous materials?

These questions may be on the test. If you can't answer them all, re-read pages 9-1 through 9-7.

The Shipping Paper

The shipping paper shown in Figure 9-6 describes a shipment. A shipping paper for hazardous materials must include:

✓ Page numbers if the shipping paper has more than one page. The first page must tell the total number of pages. For example, "Page 1 of 4."

✓ A proper shipping description for each hazardous material.

✓ A ***"shipper's certification,"*** signed by the shipper saying they prepared the shipment according to the rules.

The Item Description

If a shipping paper describes both hazardous and non-hazardous products, the hazardous materials will be either:

- ✓ Described first.
- ✓ Highlighted in a contrasting color.
- ✓ Identified by an “X” placed before the shipping name in a column captioned “HM.” The letters “RQ” may be used instead of “X” if a reportable quantity is present in one package.

The basic description of hazardous materials includes the proper shipping name, hazard class or division, the identification number, and the packing group, if any, in that order. The packing group is displayed in Roman numerals and may be preceded by “PG.”

Shipping name, hazard class, and identification number must not be abbreviated unless specifically authorized in the hazardous materials regulations. The description must also show:

- ✓ The total quantity and the unit of measure.
- ✓ The letter RQ, if a reportable quantity.
- ✓ If the letters RQ appear, the name of the hazardous substance.
- ✓ For “n.o.s.” and generic descriptions, the technical name of the hazardous material.

“RQ” means that this is a reportable quantity

Hazard Class from Column 3 of the Table

Proper shipping name from Column 2 of the Hazardous Materials Table

Identification Number from Column 4 of the Hazardous Materials Table.

SHIPPING PAPER Page 1 of 1

TO: Wafers R US
88 Valley Street
Silicon Junction, CA

FROM: Essex Corporation
5775 Dawson Avenue
Coleta, CA 93117

QTY	HM	DESCRIPTION	WEIGHT
1 cyl	RQ	Phosgene, 2.3, UN1076 Poison, Inhalation Hazard, Zone A	25 lbs

This is to certify that the above named materials are properly classified, described, packaged, marked and labeled, and are in proper condition for transportation according to the applicable regulations of the Department of Transportation.

Shipper: Essex Corp
Per: Shultz
Date: 6/27/88

Carrier: Knuckle Bros.
Per:
Date:

SPECIAL INSTRUCTIONS: 24 hr. Emergency Contact, Ed Shultz, 1-800-555-5555

Figure 9-6

Example of Shipping Paper

Shipping papers also must list an emergency response telephone number. The emergency response telephone number is the responsibility of the shipper. It can be used by emergency responders to obtain information about any hazardous materials involved in a spill or fire.

Shippers also must provide emergency response information to the motor carrier for each hazardous material being shipped. The emergency response information must be able to be used away from the motor vehicle and must provide information on how to safely handle incidents involving the material. It must include information on the shipping name of the hazardous materials, risks to health, fire, explosion, and initial methods of handling spills, fires, and leaks of the materials.

Such information can be on the shipping paper or some other document that includes the basic description and technical name of the hazardous material. Or, it may be in a guidance book such as the Emergency Response Guidebook (ERG). Motor carriers may assist shippers by keeping an ERG on each vehicle carrying hazardous materials. The driver must provide the emergency response information to any federal, state or local authority responding to a hazardous materials incident or investigating one.

Total quantity must appear before or after the basic description. The packaging type and the unit of measurement may be abbreviated. For example:

10 ctns. Paint, 3, UN1263, PG II, 500 lbs.

The shipper of hazardous wastes must put the word WASTE before the proper shipping name of the material on the shipping paper (hazardous waste manifest). For example:

Waste Acetone, 3, UN1090, PG II.

A non-hazardous material may ***not*** be described by using a hazard class or an identification number.

Shipper's Certification

When the shipper packages hazardous materials, he/she certifies that the package has been prepared according to the rules. The signed shipper's certification appears on the original shipping paper. The only exceptions are when a shipper is a private carrier transporting his or her own product and when the package is provided by the carrier or interlined carriers(for example, a cargo tank). Unless a package is clearly unsafe or does not comply with the HMR, you may accept the shipper's certification concerning proper packaging. Some carriers have additional rules about transporting hazardous materials. Follow your employer's rules when accepting shipments.

Package Markings and Labels

Shippers print required markings directly on the package, an attached label, or tag. An important package marking is the name of the hazardous material. It is the same name as the one on the shipping paper. When required, the shipper will put the following on the package:

- ✓ The name and address of shipper or consignee.
- ✓ The hazardous material's shipping name and identification number.
- ✓ The labels required.

If rules require it, the shipper will put RQ or INHALATION HAZARD on the package. Packages with liquid containers inside will also have package orientation markings with the arrows pointing in the correct upright direction. The labels used always reflect the hazard class of the product. If a package needs more than one label, the labels will be close together, near the proper shipping name.

Recognizing Hazardous Materials

Learn to recognize shipments of hazardous materials. To find out if the shipment includes hazardous materials, look at the shipping paper. Does it have:

- ✓ An entry with a proper shipping name, hazard class, and identification number?
- ✓ A highlighted entry, or one with an X or RQ in the hazardous materials column?

Other clues suggesting hazardous materials:

- ✓ What business is the shipper in? Paint dealer? Chemical supply? Scientific supply house? Pest control or agricultural supplier? Explosives, munitions, or fireworks dealer?
- ✓ Are there tanks with diamond labels or placards on the premises?
- ✓ What type of package is being shipped? Cylinders and drums are often used for hazardous materials shipments.
- ✓ Is a hazard class label, proper shipping name, or identification number on the package?
- ✓ Are there any handling precautions?

Hazardous Waste Manifest

When transporting hazardous wastes, you must sign by hand and carry a Uniform Hazardous Waste Manifest. The name and EPA registration number of the shippers, carriers, and destination must appear on the manifest. Shippers must prepare, date, and sign by hand the manifest. Treat the manifest as a shipping paper when transporting the waste. Only give the waste shipment to another registered carrier or disposal/treatment facility. Each carrier transporting the shipment must sign by hand the manifest. After you deliver the shipment, keep your copy of the manifest. Each copy must have all needed signatures and dates, including those of the person to whom you delivered the waste.

Placarding

Attach the appropriate placards to the vehicle before you drive it. You are only allowed to move an improperly placarded vehicle during an emergency, in order to protect life or property.

Placards must appear on both sides and ends of the vehicle. Each placard must be:

- ✓ Easily seen from the direction it faces.
- ✓ Placed so the words or numbers are level and read from left to right.
- ✓ At least three inches away from any other markings.
- ✓ Kept clear of attachments or devices such as ladders, doors, and tarpaulins.
- ✓ Kept clean and undamaged so that the color, format, and message are easily seen.

To decide which placards to use, you need to know:

- ✓ The hazard class of the materials.
- ✓ The amount of hazardous materials shipped.
- ✓ The total weight of all classes of hazardous materials in your vehicle.

Always make sure that the shipper shows the correct basic description on the shipping paper and verifies that the proper labels are shown on the packages. If you are not familiar with the material, ask the shipper to contact your office.

Placard Tables

There are two placard tables, Table 1 and Table 2. Table 1 materials must be placarded whenever any amount is transported.

TABLE 1 — ANY AMOUNT

CLASS	PLACARD	SECTION NO. REFERENCE
1.1	Explosives 1.1	172.522
1.2	Explosives 1.2	172.522
1.3	Explosives 1.3	172.522
2.3	Poison Gas	172.540
4.3	Dangerous When Wet	172.548
5.2	Organic Peroxide	172.552
(Organic Peroxide, Type B, liquid or solid, temperature controlled)		
6.1	Poison	172.554
(PG I, Inhalation Hazard, Zone A and B)		
7	Radioactive[1]	172.556
(Radioactive Yellow III label only)		

[1]The Radioactive placard is also required for exclusive use shipments of low specific activity material, per §173.425(b) or (c)

Except for bulk packaging and materials with PIH or dangerous when wet subsidiary hazards, the hazard classes in Table 2 need placards only if the total amount transported is 1,001 pounds or more, including the package. Add the amounts from all shipping papers for all the Table 2 products you have on board. You may use DANGEROUS placards instead of separate placard for each Table 2 hazard class when:

PLACARD TABLE 2 — 1,001 POUNDS OR MORE

1.4	Explosives 1.4	172.523
1.5	Explosives 1.5	172.524
1.6	Explosives 1.6	172.525
2.1	Flammable Gas	172.532
2.2	Nonflammable Gas	172.528
3	Flammable	172.542
Combustible liquid	Combustible	172.544
4.1	Flammable Solid	172.546
4.2	Spontaneously Combustible	172.547
5.1	Oxidizer	172.550
5.2	Organic Peroxide	172.552
(Other than Organic Peroxide Type B, liquid or solid, temperature controlled)		
6.1	Poison	172.554
(PG I or II, other than PG I Inhalation Hazard)		
6.1 (PG III)	Keep Away From Food	172.553
6.2	(None)	
8	Corrosive	172.553
9	Class 9	172.560
ORM-D	(None)	

- ✓ You have 1,001 pounds or more of two or more Table 2 hazard classes, requiring different placards, and
- ✓ You have not loaded 2,025 pounds of more than any Table 2 hazard class material at any one place. (You must use the specific placard for this material.)

If the words INHALATION HAZARD are on the shipping paper or package, you must display POISON placards in addition to any other placards needed by the product's hazard class.

You need not use EXPLOSIVES 1.5, OXIDIZER, and DANGEROUS placards if a vehicle contains Division 1.1 or 1.2 explosives and is placarded with EXPLOSIVES 1.1 or 1.2 placards. You need not use a Division 2.2 NON-FLAMMABLE GAS placard on a vehicle displaying a Division 2.1 FLAMMABLE GAS or for oxygen a Division 2.2 OXYGEN placard.

Placards used to identify the primary hazard class of a material must have the hazard class or division number displayed in the lower corner of the placard. No hazard class or division number is allowed on placards used to identify a secondary hazard class of a material.

Placards may be displayed for hazardous materials even if not required as long as the placard identifies the hazard of the material being transported.

Test Your Knowledge

1. What is a shipper's certification? Where does it appear? Who signs it?
2. When may non-hazardous materials be described by hazard class words or identification numbers?
3. Name five hazard classes that require placarding in ***any*** amount.
4. A shipment described on the Hazardous Waste Manifest may only be delivered to another (fill in the blank) carrier or treatment facility, which then signs the (fill in the blank) giving you a copy which you must keep.
5. Your load includes 20 pounds of Division 2.3 gas and 1,001 pounds of flammable gas. What placards do you need, if any?

These questions may be on the test. If you can't answer them all, re-read pages 9-5 through 9-7.

9.4 Loading and Unloading

Do all you can to protect containers of hazardous materials. Don't use any tool which might damage containers or other packaging during loading. Don't use hooks.

General Loading Requirements

Before loading or unloading, set the parking brake. Make sure the vehicle will not move.

Many products become more hazardous when exposed to heat. Load hazardous materials away from heat sources.

Watch for signs of leaking or damaged containers: LEAKS SPELL TROUBLE! Do not transport leaking packages. Depending on the material, you, your truck, and others could be in danger.

Containers of Class 1 (explosives), Class 3 (flammable liquids), Class 4 (flammable solids), Class 5 (oxidizers), Class 8 (corrosives), Class 2 (gases), and Division 6.1 (poisons) must be braced to prevent movement of the packages during transportation.

No Smoking. When loading or unloading hazardous materials, keep fire away. Don't let people smoke nearby. Never smoke around:

Class 1 (EXPLOSIVES)	Division 2.1 (FLAMMABLE GAS)	Class 4 (FLAMMABLE SOLIDS)
Class 5 (OXIDIZERS)	Class 3 (FLAMMABLE LIQUIDS)	

Secure Against Movement in All Directions. Brace containers so they will not fall, slide, or bounce around during transportation. Be very careful when loading containers that have valves or other fittings.

After loading, do not open any package during your trip. Never transfer hazardous materials from one package to another while in transit. You may empty a cargo tank, but do not empty any other package while it is on the vehicle.

Cargo Heater Rules. There are special cargo heater rules for loading:

Class 1 (EXPLOSIVES)	Class 3 (FLAMMABLE LIQUIDS)	Division 2.1 (FLAMMABLE GAS)

The rules usually forbid use of cargo heaters, including automatic cargo heater/air conditioner units. Unless you have read all the related rules, don't load the above products in a cargo space that has a heater.

Use Closed Cargo Space. You cannot have overhang or tailgate loads of:

Class 1 (EXPLOSIVES)	Class 4 (FLAMMABLE SOLIDS)	Class 5 (OXIDIZERS)

You must load these hazardous materials into a closed cargo space unless all packages are:

- ✓ Fire and water resistant.
- ✓ Covered with a fire and water resistant tarp.

Precautions for Specific Hazards

Explosives. Turn your engine off before loading or unloading any explosives. Then check the cargo space. You must:

- ✓ Disable cargo heaters. Disconnect heater power sources and drain heater fuel tanks.
- ✓ Make sure there are no sharp points that might damage cargo. Look for bolts, screws, nails, broken side panels, and broken floor boards.

✓ Use a floor lining with Division 1.1, 1.2, or 1.3 (Class A or B explosives). The floors must be tight and the liner must be either non-metallic material or non-ferrous metal.

Use extra care to protect explosives. Never use hooks or other metal tools. Never drop, throw, or roll packages. Protect explosive packages from other cargo that might cause damage.

Do not transfer a Division 1.1, 1.2, or 1.3 (Class A or B explosive) from one vehicle to another on a public roadway except in an emergency. If safety requires an emergency transfer, set out red warning reflectors, flags, or electric lanterns. You must warn others on the road.

Never transport damaged packages of explosives. Do not take a package that shows any dampness or oily stain.

Do not transport Division 1.1 or 1.2 (Class A explosives) in triples or in vehicle combinations if:

✓ There is a marked or placarded cargo tank in the combination.

✓ The other vehicle in the combination contains:

- Division 1.1 A (initiating explosives).
- Packages of Class 7 (radioactive) materials labeled “Yellow III.”
- Division 2.3 (poisonous gas) or Division 6.1 (poisonous) materials.
- Hazardous materials in a portable tank, on a DOT Spec 106A or 110A tank.

Class 8 (Corrosive) Materials. If loading by hand, load breakable containers of corrosive liquid one by one. Keep them right side up. Do not drop or roll the containers. Load them onto an even floor surface. Stack carboys only if the lower tiers can bear the weight of the upper tiers safely.

Do not load nitric acid above any other product, or stack more than two high.

Load charged storage batteries so their liquid won’t spill. Keep them right side up. Make sure other cargo won’t fall against or short circuit them.

Never load corrosive liquids next to or above:

✓ Division 1.4 (Explosives C).

✓ Class 4 (Flammable Solids).

✓ Class 5 (Oxidizers).

✓ Division 2.3, Zone B (Poisonous Gases).

Never load corrosive liquids with:

✓ Division 1.1 or 1.2 (Explosives A).

✓ Division 1.2 or 1.3 (Explosives B).

✓ Division 1.5 (Blasting Agents).

✓ Division 2.3, Zone A (Poisonous Gases).

✓ Division 4.2 (Spontaneously Combustible Materials).

✓ Division 6.1, PG I, Zone A (Poison Liquids).

Class 2 (Compressed Gases) Including Cryogenic Liquids. If your vehicle doesn’t have racks to hold cylinders, the cargo space floor must be flat. The cylinders must be:

✓ Held upright or braced laying down flat.

✓ In racks attached to the vehicle.

✓ In boxes that will keep them from turning over.

Division 2.3 (Poisonous Gas) or Division 6.1 (Poisonous) Materials. Never transport these materials in containers with interconnections. Never load a package labeled POISON or POISON GAS in the driver's cab or sleeper or with food material for human or animal consumption.

Class 7 (Radioactive) Materials. Some packages of Class 7 (radioactive) materials bear a number called the ***transport index***. The shipper labels these packages Radioactive II or Radioactive III, and prints the package's transport index on the label. Radiation surrounds each package, passing through all nearby packages. To deal with this problem, the number of packages you can load together is controlled. Their closeness to people, animals, and unexposed film is also controlled. The transport index tells the degree of control needed during transportation. The total transport index of all packages in a single vehicle must not exceed 50.

Appendix A to this section shows rules for each transport index. It shows how close you can load Class 7 (radioactive) materials to people, animals, or film. For example, you can't leave a package with a transport index of 1.1 within two feet of people or cargo space walls.

Mixed loads. The rules require some products to be loaded separately. You cannot load them together in the same cargo space. Figure 9-7 lists some examples. The regulations (the Segregation and Separation Chart) name other materials you must keep apart.

DO NOT LOAD...	IN THE SAME VEHICLE WITH...
Division 6.1 or 2.3 (POISON or poison gas labeled material)	animal or human food unless the poison package is overpacked in an approved way. Foodstuffs are anything you swallow. However, mouthwash, toothpaste, and skin creams are not foodstuff.
Division 2.3 (poisonous) gas Zone A or Division 6.1 (poison) liquids, PGI, Zone A	Division 5.1 (oxidizers), Class 3 (flammable liquids), Class 8 (corrosive liquids), Division 5.2 (organic peroxides), Division 1.1, 1.2, 1.3 (Class A or B) explosives, Division 1.5 (blasting agents), Division 2.1 (flammable gases), Class 4 (flammable solids).
Charged storage batteries	Division 1.1 (Class A Explosives)
Class 1 (Detonating primers)	any other explosives unless in authorized containers or packagings.
Division 6.1 (Cyanides or cyanide mixtures)	acids, corrosive materials, or other acidic materials which could release hydrocyanic acid from cyanides. For example: **Cyanides**, Inorganic, n.o.s. Silver **Cyanide** Sodium **Cyanide**
Nitric acid (Class 8)	other materials unless the nitric acid is not loaded above any other material and not more than two tiers high.

Figure 9-7

Prohibited Loading Combinations

Test Your Knowledge

1. Around which hazard classes must you never smoke?
2. Which three hazard classes should not be loaded into a trailer that has a heater/ air conditioner unit?
3. Should the floor liner required for Division 1.1 or 1.2 (Explosives A) be stainless steel?
4. At the shipper's dock you're given a paper for 100 cartons of battery acid. You already have 100 pounds of dry Silver Cyanide on board. What precautions do you have to take?
5. Name a hazard class that uses transport indexes to determine the amount that can be loaded in a single vehicle.

These questions may be on the test. If you can't answer them all, re-read Section 9.4.

9.5 Bulk Packaging Marking, Loading and Unloading

The glossary at the end of this section gives the meaning of the word bulk. ***Cargo tanks*** are bulk packagings permanently attached to a vehicle. Cargo tanks remain on the vehicle when you load and unload them. ***Portable tanks*** are bulk containers which are not permanently attached to a vehicle. The product is loaded or unloaded while the portable tanks are off the vehicle. Portable tanks are then put on a vehicle for transportation. There are many types of cargo tanks in use. The most common cargo tanks are MC306 for liquids and MC331 for gases.

Markings

You must display the identification number of the hazardous materials in portable tanks and cargo tanks and other bulk packagings (such as dump trucks). Identification numbers are in column 4 of the Hazardous Materials Table. The rules require black 100 mm (3.9 inch) numbers on orange panels, placards, or a white, diamond-shaped background if no placards are required. Specification cargo tanks must show re-test date markings.

Portable tanks must also show the lessee or owner's name. They must also display the shipping name of the contents on two opposing sides. The letters of the shipping name must be at least two inches tall on portable tanks with capacities of more than 1,000 gallons and one-inch tall on portable tanks with capacities of less that 1,000 gallons. The identification number must appear on each side ***and*** each end of a portable tank or other bulk packaging that hold 1,000 gallons or more and on two opposing sides, if the portable tank holds less than 1,000 gallons. The identification numbers must still be visible when the portable tank is on the motor vehicle. If they are not visible, you must display the identification number on both sides and ends of the motor vehicle.

Tank Loading

The person in charge of loading and unloading a cargo tank must be sure a qualified person is always watching. This person watching the loading or unloading must:

✓ Be alert.

✓ Have a clear view of the cargo tank.

✓ Be within 25 feet of the tank.

✓ Know of the hazards of the materials involved.

- ✓ Know the procedures to follow in an emergency.
- ✓ Be authorized to move the cargo tank and able to do so.

Close all manholes and valves before moving a tank of hazardous materials, no matter how small the amount in the tank or how short the distance. Manholes and valves must be closed to prevent leaks.

Flammable Liquids

Turn off your engine before loading or unloading any flammable liquids. Only run the engine if needed to operate a pump. Ground a cargo tank correctly before filling it through an open filling hole. Ground the tank before opening the filling hole, and maintain the ground until after closing the filling hole.

Compressed Gas

Keep liquid discharge valves on a compressed gas tank closed except when loading and unloading. Unless your engine runs a pump for product transfer, turn it off when loading or unloading. If you use the engine, turn it off after product transfer, before you unhook the hose. Unhook all loading/unloading connections before coupling, uncoupling, or moving a chlorine cargo tank. Always chock trailers and semitrailers to prevent motion when uncoupled from the power unit.

Test Your Knowledge

1. What are cargo tanks?
2. How is a portable tank different from a cargo tank?
3. Your engine runs a pump used during delivery of compressed gas. Should you turn off the engine ***before*** or ***after*** unhooking hoses after delivery?

These questions may be on the test. If you can't answer them all, re-read Section 9.5.

9.6 Hazardous Materials — Driving and Parking Rules

Parking With Division 1.1, 1.2, or 1.3 (Class A or B) Explosives

Never park with Division 1.1, 1.2, or 1.3 (Class A or B) explosives within five feet of the travelled part of the road. Except for short periods of time needed for vehicle operation necessities (e.g., fueling), do not park within 300 feet of:

- ✓ A bridge, tunnel, or building.
- ✓ A place where people gather.
- ✓ An open fire.

If you must park to do your job, do so only briefly.

Don't park on private property unless the owner is aware of the danger. Someone must always watch the parked vehicle. You may let someone else watch it for you only if your vehicle is:

- ✓ On the shipper's property.
- ✓ On the carrier's property.
- ✓ On the consignee's property.

You are allowed to leave your vehicle unattended in a safe haven. A safe haven is an approved place for parking unattended vehicles loaded with explosives. Designation of authorized safe havens are usually made by local authorities.

Parking A Placarded Vehicle Not Transporting Division 1.1, 1.2, or 1.3 (Class A or B) Explosives

You may park a placarded vehicle (not laden with explosives) within five feet of the travelled part of the road only if your work requires it. Do so only briefly. Someone must always watch the vehicle when parked on a public roadway or shoulder. Do not uncouple a trailer and leave it with hazardous materials on a public street. Do not park within 300 feet of an open fire.

Attending Parked Vehicles

The person attending a placarded vehicle must:

- ✓ Be in the vehicle, awake and not in the sleeper berth, or within 100 feet of the vehicle and have it within clear view.
- ✓ Be aware of the hazards of the materials being transported.
- ✓ Know what to do in emergencies.
- ✓ Be able to move the vehicle, if needed.

No Flares!

You might break down and have to use stopped vehicle signals. Use reflective triangles or red electric lights. Never use burning signals, such as flares or fusees, around a:

- ✓ Tank used for Class 3 (flammable liquids) or Division 2.1 (flammable gas) whether loaded or empty.
- ✓ Vehicle loaded with Division 1.1, 1.2, or 1.3 (Class A or B) explosives.

Route Restrictions

Some states and counties require permits to transport hazardous materials or wastes. They may limit the routes you can use. Local rules about routes and permits change often. It is your job as driver to find out if you need permits or must use special routes. Make sure you have all needed papers before starting.

If you work for a carrier, ask your dispatcher about route restrictions or permits. If you are an independent trucker and are planning a new route, check with state agencies where you plan to travel. Some localities prohibit transportation of hazardous materials through tunnels, over bridges, or other roadways. Check before you start.

Whenever placarded, avoid heavily populated areas, crowds, tunnels, narrow streets, and alleys. Take other routes, even if inconvenient, unless there is no other way. Never drive a placarded vehicle near open fires unless you can safely pass without stopping.

If transporting Division 1.1, 1.2, or 1.3 (Class A or B) explosives, you must have a written route plan and follow that plan. Carriers prepare the route plan in advance and give the driver a copy. You may plan the route yourself if you pick up the explosives at a location other than your employer's terminal. Write out the plan in advance. Keep a copy of it with you while transporting the explosives. Deliver shipments of explosives only to authorized persons or leave them in locked rooms designed for explosives storage.

A carrier must choose the safest route to transport placarded radioactive materials. After choosing the route, the carrier must tell the driver about the radioactive materials, and show the route plan.

No Smoking

Do not smoke within 25 feet of a placarded cargo tank used for Class 3 (flammable liquids) or Division 2.1 (gases). Also, do not smoke or carry a lighted cigarette, cigar, or pipe within 25 feet of any vehicle which contains:

Class 1	Class 3	Class 4	Class 5
EXPLOSIVES	FLAMMABLE LIQUIDS	FLAMMABLE SOLIDS	OXIDIZERS

Refuel With Engine Off

Turn off your engine before fueling a motor vehicle containing hazardous materials. Someone must always be at the nozzle, controlling fuel flow.

10 B:C Fire Extinguisher

The power unit of placarded vehicles must have a fire extinguisher with a UL rating of 10 B:C or more.

Check Tires Every 2 Hours/100 Miles

Make sure your tires are properly inflated. Check placarded vehicles with dual tires at the start of each trip and when you park. You must stop and check the tires every 2 hours or 100 miles, whichever is less. The only acceptable way to check tire pressure is to use a tire pressure gauge.

Do not drive with a tire that is leaking or flat except to the nearest safe place to fix it. Remove any overheated tire. Place it a safe distance from your vehicle. Don't drive until you correct the cause of the overheating. Remember to follow the rules about parking and attending placarded vehicles. They apply even when checking, repairing, or replacing tires.

Where to Keep Shipping Papers and Emergency Response Information

Do not accept a hazardous materials shipment without a properly prepared shipping paper. A shipping paper for hazardous materials must always be easily recognized. Other people must be able to find it quickly after an accident.

- ✓ Clearly distinguish hazardous materials shipping papers from others by tabbing them or keeping them on top of the stack of papers.
- ✓ When you are behind the wheel, keep shipping papers within your reach (with your seat belt on), or in a pouch on the driver's door. They must be easily seen by someone entering the cab.
- ✓ When not behind the wheel, leave shipping papers in the driver's door pouch or on the driver's seat.
- ✓ Emergency response information must be kept in the same location as the shipping paper.

Papers for Division 1.1, 1.2, or 1.3 (Class A or B) Explosives

A carrier must give each driver transporting Division 1.1, 1.2, or 1.3 (Class A or B) explosives a copy of Federal Motor Carrier Safety Regulations (FMCSR), Part 397. The carrier must also give written instructions on what to do if delayed or in an accident. The written instructions must include:

- ✓ The names and telephone numbers of people to contact (including carrier agents or shippers).
- ✓ The nature of the explosives transported.
- ✓ The precautions to take in emergencies such as fires, accidents, or leaks.

Drivers must sign a receipt for these documents.

You must be familiar with, and have in your possession while driving, the:

- ✓ Shipping papers.
- ✓ Written emergency instructions.

- ✓ Written route plan.
- ✓ A copy of FMCSR, Part 397.

Equipment for Chlorine

A driver transporting chlorine in cargo tanks must have an approved gas mask in the vehicle. The driver must also have an emergency kit for controlling leaks in dome cover plate fittings on the cargo tank.

Stop Before Railroad Crossings

Stop before a railroad crossing if your vehicle:

- ✓ Is marked or placarded.
- ✓ Carries any amount of chlorine.
- ✓ Has cargo tanks, whether loaded or empty, used for hazardous materials.

You must stop 15 to 50 feet before the nearest rail. Proceed only when you are sure no train is coming. Don't shift gears while crossing the tracks.

9.7 Hazardous Materials — Emergencies

No Smoking
Warn Others
Keep People Away
Avoid Contact or Inhaling

Emergency Response Guidebook (ERG)

The Department of Transportation has a guidebook for firefighters, police, and industry workers on how to protect themselves and the public from hazardous materials. The guide is indexed by proper shipping name and hazardous materials identification number. Emergency personnel look for these things on the shipping paper. That is why it is vital that the proper shipping name, identification number, label, and placards are correct.

Accidents/Incidents

As a professional driver, your job at the scene of an accident is to:

- ✓ Keep people away from the scene.
- ✓ Limit the spread of material, ***only if you can safely do so***.
- ✓ Communicate the danger of the hazardous materials to emergency response personnel.
- ✓ Provide emergency responders with the shipping papers and emergency response information.

Follow this checklist:

- ✓ Check to see that your driving partner is OK.
- ✓ Keep shipping papers with you.
- ✓ Keep people far away and upwind.
- ✓ Warn others of the danger.
- ✓ Send for help.
- ✓ Follow your employer's instructions.

Fires

You might have to control minor truck fires on the road. ***However, unless you have the training and equipment to do so safely, don't fight hazardous materials fires.*** Dealing with hazardous materials fires requires special training and protective gear.

When you discover a fire, send for help. You may use the fire extinguisher to keep minor truck fires from spreading to cargo before firefighters arrive. Feel trailer doors to see if they are hot before opening them. If hot, you may have a cargo fire and should not open the doors. Opening doors lets air in and may make the fire flare up. Without air, many fires only smolder until firemen arrive, doing less damage. If your cargo is already on fire, it is not safe to fight the fire. Keep the shipping papers with you to give to emergency personnel as soon as they arrive. ***Warn other people of the danger and keep them away.***

If you discover a cargo leak, identify the hazardous materials leaking by using shipping papers, labels, or package location. ***Do not touch any leaking material — many people injure themselves by touching hazardous materials.*** Do not try to identify the material or find the source of a leak by smell. Toxic gases can destroy your sense of smell and can injure or kill you even if they don't smell. Never eat, drink, or smoke around a leak or spill.

If hazardous materials are spilling from your vehicle, do not move it any more than safety requires. You may move off the road and away from places where people gather, if doing so serves safety. Only move your vehicle if you can do so without danger to yourself or others.

Never continue driving with hazardous materials leaking form your vehicle in order to find a phone booth, truck stop, help, or similar reason. Remember, the carrier pays for the cleanup of contaminated parking lots, roadways, and drainage ditches. The costs are enormous, so don't leave a lengthy trail of contamination. If hazardous materials are spilling from your vehicle:

- ✓ Park it.
- ✓ Secure the area.
- ✓ Stay there.
- ✓ Send someone else for help.

When sending someone for help, give that person:

- ✓ A description of the emergency.
- ✓ Your exact location and direction of travel.
- ✓ Your name, the carrier's name, and the name of the community or city where your terminal is located.
- ✓ The proper shipping name, hazard class, and identification number of the hazardous materials, if you know them.

This is a lot for someone to remember. It is a good idea to write it all down for the person you send for help. The emergency response team must know these things to find you and to handle the emergency. They may have to travel miles to get to you. This information will help them to bring the right equipment the first time, without having to go back for it.

Never move your vehicle, if doing so will cause contamination or damage the vehicle. Keep downwind and away from roadside rests, truck stops, cafes, and businesses. Never try to repack leaking containers. Unless you have the training and equipment to repair leaks safely, don't try it. Call your dispatcher or supervisor for instructions and, if needed, emergency personnel.

Responses to Specific Hazards

Class 1 (Explosives). If your vehicle has a breakdown or accident while carrying explosives, warn others of the danger. Keep bystanders away. Do not allow smoking or open fire near the vehicle. If there is a fire, warn everyone of the danger of explosion.

Remove all explosives before separating vehicles involved in a collision. Place the explosives at least 200 feet from the vehicles and occupied buildings. Stay a safe distance away.

Class 2 (Compressed Gases). If compressed gas is leaking from your vehicle, warn others of the danger. Only permit those involved in removing the hazard or wreckage to get close. You must notify the shipper if compressed gas is involved in any accident.

Unless you are fueling machinery used in road construction or maintenance, do not transfer a flammable compressed gas from one tank to another on any public roadway.

Class 3 (Flammable Liquids). If you are transporting a flammable liquid and have an accident or your vehicle breaks down, prevent bystanders from gathering. Warn people of the danger. Keep them from smoking.

Never transport a leaking cargo tank farther than needed to reach a safe place. Get off the roadway if you can do so safely. Don't transfer flammable liquid from one vehicle to another on a public roadway except in an emergency.

Class 4 (Flammable Solids) and Class 5 (Oxidizing Materials). If a flammable solid or oxidizing material spills, warn others of the fire hazard. Do not open smoldering packages of flammable solids. Remove them from the vehicle if you can safely do so. Also, remove unbroken packages if it will decrease the fire hazard.

Class 6 (Poisonous Materials and Infectious Substances). It is your job to protect yourself, other people, and property from harm. Remember that many products classed as poisons are also flammable. If you think a Division 2.3 (poisonous gas) or Division 6.1 (poisonous material) might be flammable, take the added precautions needed for flammable liquids or gases. Do not allow smoking, open flame, or welding. Warn others of the hazards of fire, of inhaling vapors, or coming in contact with the poison.

A vehicle involved in a leak of Division 2.3 (poisonous gases) or Division 6.1 (poisonous materials) must be checked for stray poison before being used again.

If a Division 6.2 (infectious substances) package is damaged in handling or transportation, you should immediately contact your supervisor. Packages which appear to be damaged or shows signs of leakage should not be accepted.

Class 7 (Radioactive Materials). If radioactive material is involved in a leak or broken package, tell your dispatcher or supervisor as soon as possible. If there is a spill, or if an internal container might be damaged, do not touch or inhale the material. Do not use the vehicle until it is cleaned and checked with a survey meter.

Class 8 (Corrosive Materials). If corrosives spill or leak during transportation, be careful to avoid further damage or injury when handling the containers. Parts of the vehicle exposed to a corrosive liquid must be thoroughly washed with water. After unloading, wash out the interior as soon as possible before reloading.

If continuing to transport a leaking tank would be unsafe, get off the road. If safe to do so, try to contain any liquid leaking from the vehicle. Keep bystanders away from the liquid and its fumes. Do everything possible to prevent injury to others.

Required Notification

The National Response Center helps coordinate emergency response to chemical hazards. It is a resource to the local police and firefighters. It maintains a 24-hour toll-free line. You or your employer must phone when ***any*** of the following occur ***as a direct result of hazardous materials incident***:

- ✓ A person is killed.
- ✓ An injured person requires hospitalization.
- ✓ Estimated property damage exceeds $50,000.
- ✓ The general public is evacuated for one or more hours.
- ✓ One or more major transportation arteries or facilities are closed or shut down for one hour or more.

- ✓ Fire, breakage, spillage, or suspected radioactive contamination occurs.
- ✓ Fire, breakage, spillage, or suspected contamination occurs involving shipment of etiologic agents (bacteria or toxins).
- ✓ A situation exists of such a nature (e.g., continuing danger to life exists at the scene of an incident) that, in the judgment of the carrier, should be reported.

National Response Center
(800) 424-8801

Persons telephoning the National Response Center should be ready to give:

- ✓ Their name.
- ✓ Name and address of their carrier.
- ✓ Phone number where they can be reached.
- ✓ Date, time, and location of incident.
- ✓ The extent of injuries, if any.
- ✓ Classification, name, and quantity of hazardous materials involved, if such information is available.
- ✓ Type of incident and nature of hazardous materials involvement and whether a continuing danger to life exists at the scene.

If a reportable quantity of hazardous substance was involved, the caller should give the name of the shipper and the quantity of the hazardous substance discharged.

Be prepared to give your employer the required information as well. Carriers must make detailed written reports with 30 days of an incident.

CHEMTREC
(800) 424-9300

The Chemical Transportation Emergency Center (CHEMTREC) in Washington also has a 24-hour toll-free line. CHEMTREC was created to provide emergency personnel with technical information about the physical properties of hazardous materials. The National Response Center and CHEMTREC are in close communication. If you call either one, they will tell the other about the problem when appropriate.

Test Your Knowledge

1. If your placarded trailer has dual tires, how often should you check the tires?
2. What is a safe haven?
3. How close to the travelled part of the roadway can you park with Division 1.2 or 1.3 (Explosive B)?
4. How close can you park to a bridge, tunnel, or building with the same load?
5. What type of fire extinguisher must placarded vehicles carry?
6. You're hauling 100 pounds of Division 4.3 (dangerous when wet) material. Do you need to stop before railroad crossings?
7. At a rest area you discover your hazardous materials shipments slowly leaking from the vehicle. There's no phone around. What should you do?
8. What is the Emergency Response Guide (ERG)?

These questions may be on the test. If you can't answer them all, re-read Sections 9.6 and 9.7.

Table A — Radioactive Separation Table

(Note: You will not be tested on the numbers in this table.)

Do not leave radioactive yellow–II or yellow–III labeled packages near people, animals, or film longer than shown in this table.

TOTAL TRANSPORT INDEX	MINIMUM DISTANCE IN FEET TO NEAREST UNDEVELOPED FILM					TO PEOPLE OR CARGO COMPARTMENT PARTITIONS
	0-2 Hours	2-4 Hours	4-8 Hours	8-12 Hours	Over 12 Hours	
None	0	0	0	0	0	0
0.1 to 1.0	1	2	3	4	5	1
1.1 to 5.0	3	4	6	8	11	2
5.1 to 10.0	4	6	9	11	15	3
10.1 to 20.0	5	8	12	16	22	4
20.1 to 30.0	7	10	15	20	29	5
30.1 to 40.0	8	11	17	22	33	6
40.1 to 50.0	9	12	19	24	36	

Table B — Table of Hazard Class Definitions

(Note: You will not be tested on this table.)

Kinds of Hazardous Materials.

Hazardous materials are categorized into nine major hazard classes and additional categories for consumer commodities and combustible liquids. The classes of hazardous materials are as follows:

Class	Class Name	Example
1	Explosives	Ammunition, Dynamite, Fireworks
2	Gases	Propane, Oxygen, Helium
3	Flammable	Gasoline Fuel, Acetone
4	Flammable Solids	Matches, Fusees
5	Oxidizers	Ammonium Nitrate, Hydrogen Peroxide
6	Poisons	Pesticides, Arsenic
7	Radioactive	Uranium, Plutonium
8	Corrosives	Hydrochloric Acid, Battery Acid
9	Miscellaneous Hazardous Materials	Formaldehyde, Asbestos
None	ORM-D (Other Regulated Material – Domestic)	Hair Spray or Charcoal
None	Combustible Liquids	Fuel Oils, Lighter Fluid

Hazardous Materials Glossary

This glossary presents definitions of certain terms used in this section. A complete glossary of terms can be found in the federal Hazardous Materials Rules (49 CFR 171.8). You should have an up-to-date copy of these rules for your reference.

(Note: You will not be tested on this glossary.)

Section 171.8 Definitions and Abbreviations

Bulk packaging means a packaging, other than a vessel, or a barge, including a transport vehicle or freight container, in which hazardous materials are loaded with no intermediate form of containment and which has:

(1) A maximum capacity greater than 450 L (119 gallons) as a receptacle for a liquid:

(2) A maximum net mass greater than 400 kg (882 pounds) or a maximum capacity greater than 450 L (119 gallons) as a receptacle for a solid; or

(3) A water capacity greater than 454 kg (1000 pounds) as a receptacle for a gas as defined in Sec. 173.115.

Cargo tank means a bulk packaging which:

(1) Is a tank intended primarily for the carriage of liquids or gases and includes appurtenances, reinforcements, fittings, and closures (for "tank," see 49 CFR 178.345–1(c), 178.337-1, or 178.338-1, as applicable);

(2) Is permanently attached to or forms a part of a motor vehicle, or is not permanently attached to a motor vehicle but which, by reason of its size, construction, or attachment to a motor vehicle is loaded or unloaded without being removed from the motor vehicle; and

(3) Is not fabricated under a specification for cylinders, portable tanks, tank cars, or multi-unit tank car tanks.

Carrier means a person engaged in the transportation of passengers or property by:

(1) Land or water as a common, contract, or private carrier, or

(2) Civil aircraft.

Consignee means the business or person to whom a shipment is delivered.

Division means a subdivision of a hazard class.

EPA means U.S. Environmental Protection Agency.

FMCSR means the Federal Motor Carrier Safety Regulations.

Freight container means a reusable container having a volume of 64 cubic feet or more, designed and constructed to permit being lifted with its contents intact and intended primarily for containment of packages (in unit form) during transportation.

Fuel tank means a tank, other than a cargo tank, used to transport flammable or combustible liquid or compressed gas for the purpose of supplying fuel for propulsion of the transport vehicle to which it is attached, or for the operation of other equipment on the transport vehicle.

Gross weight or gross mass means the weight of a packaging plus the weight of its contents.

Hazard class means the category of hazard assigned to a hazardous material under the definitional criteria of Part 173 and the provisions of the Sec. 172.101 Table. A material may meet the defining criteria for more than one hazard class, but is assigned to only one hazard class.

Hazardous materials means a substance or material which has been determined by the Secretary of Transportation to be capable of posing an unreasonable risk to health, safety, and property when transported in commerce, and which as been so designated. The term includes hazardous substances,

hazardous wastes, marine pollutants, and elevated temperature materials as defined in this section, materials designated as hazardous under the provisions of Sec. 172.101 and 172.102, and materials that meet the defining criteria for hazard classes and divisions in Part 173.

Hazardous substance means a material, including its mixtures and solutions, that:

(1) Is listed in Appendix A to Sec. 172.101;

(2) Is in a quantity, in one package, which equals or exceeds the reportable quantity (RQ) listed in Appendix A to Sec. 172.101; and

(3) When in a mixture or solution —

(i) For radionuclides, conforms to paragraph 6 of Appendix A to Sec. 172.101.

(ii) For other than radionuclides, is in a concentration by weight which equals or exceeds the concentration corresponding to the RQ of the material, as shown in the following table:

RQ POUNDS (KILOGRAMS)	CONCENTRATION BY WEIGHT	
	Percent	PPM
5,000 (2270)	10	100,000
1,000 (454)	2	20,000
100 (45.4)	0.2	2,000
10 (4.54)	0.02	200
1 (0.454)	0.002	20

This definition does not apply to petroleum products that are lubricants or fuels (see 40 CFR 300.6).

Hazardous waste, for the purposes of this chapter, means any material that is subject to the Hazardous Waste Manifest Requirements of the U.S. Environmental Protection Agency specified in 40 CFR Part 262.

Limited quantity, when specified as such in a section applicable to a particular material, means the maximum amount of a hazardous material for which there may be specific labeling or packaging exception.

Marking means the descriptive name, identification number, instructions, cautions, weight, specification, or UN marks or combinations thereof, required by this subchapter on outer packagings of hazardous materials.

Mixture means a material composed of more than one chemical compound or element.

Name of contents means the proper shipping name as specified in Sec. 172.101.

Non-bulk packaging means a packaging which has:

(1) A maximum capacity of 450 L (119 gallons) as a receptacle for a liquid;

(2) A maximum net mass less than 400 kg (882 pounds) and a maximum capacity of 450 L (119 gallons) or less as a receptacle for a solid; or

(3) A water capacity greater than 454 kg (1,000 pounds) or less as a receptacle for a gas as defined in Sec. 173.115.

N.O.S. means not otherwise specified.

Outage or ullage means the amount by which a packaging falls short of being liquid full, usually expressed in percent by volume.

Portable tank means a bulk packaging (except a cylinder having a water capacity of 1,000 pounds or less) designed primarily to be loaded onto, or on, or temporarily attached to a transport vehicle or ship and equipped with skids, mountings, or accessories to facilitate handling of the tank by mechanical

means. It does not include a cargo tank, tank car, multi-unit tank car tank, or trailer carrying 3AX, 3AAX, or 3T cylinders.

Proper shipping name means the name of the hazardous materials shown in Roman print (not italics) in Sec. 172.101.

P.s.i. or psi means pounds per inch.

P.s.i.a. or psia means pounds per square inch absolute.

Reportable quantity (RQ) means the quantity specified in Column 3 of the Appendix to Sec. 172.101 for any material identified in Column 1 of the Appendix.

RSPA means the Research and Special Programs Administration, U.S. Department of Transportation, Washington, DC 20590.

Shipper's certification means a statement on a shipping paper, signed by the shipper, saying he/she prepared the shipment properly according to law.

> "This is to certify that the above names materials are properly classified, described, packaged, marked and labeled, and are in proper condition for transportation according to the applicable regulations or the Department of Transportation." or
>
> "I hereby declare that the contents of this consignment are fully and accurately described above the proper shipping name and are classified, packed, marked and labeled, and are in all respects in proper condition for transport by * according to applicable international and national government regulations."
>
> * Words may be inserted here to indicate mode of transportation (rail, aircraft, motor vehicle, vessel)

Shipping paper means a shipping order, bill of lading, manifest, or other shipping document serving a similar purpose and containing the information required by Sec. 172.202, 172.203, and 172.204.

Technical name means a recognized chemical name or microbiological name currently used in scientific and technical handbooks, journals, and texts.

Transport vehicle means a cargo-carrying vehicle such as an automobile, van, tractor, truck, semitrailer, tank car, or rail car used for the transportation of cargo by any mode. Each cargo-carrying body (trailer, rail car, etc.) is a separate transport vehicle.

UN standard packaging means a specification packaging conforming to the requirements in Subpart L and M of Part 178.

UN means United Nations.

Overview: Michigan CDL Skills Test

CDL Skills Test Requirements and Overview

Before taking the CDL skills test, you must:

- Meet driving record eligibility requirements, pass all required vision and CDL written tests and obtain a CDL Temporary Instruction Permit (TIP).
- Contact any approved third party driver skills test organization to schedule your CDL skills test. **Ask about the third party CDL skills test fee policy when you schedule your exam.** Your local Secretary of State branch office has information about test site locations in your area.
- Show the third party driver skills test organization your valid Michigan photo driver license and Medical Examiner's Certificate (commonly known as a DOT card or School Bus card) or medical waiver.
- Provide a test vehicle(s) with a GVWR representative of the type you plan to drive.
  - Vehicles and trailers used for the CDL skills tests ***must be empty*** and meet the equipment and safety inspection requirements of the Michigan and Federal Motor Carrier Safety Regulations.
  - Vehicles must include a seat equipped with a safety belt for both the driver and examiner. Buses are not required to have safety belts for the examiner.
  - Vehicles and trailers used for the CDL skills tests must have a valid registration and proof of insurance.
  - Vehicles used for testing must be able to travel at safe and legal highway speeds.
- Pay the CDL third party skills tests fee.
- After passing the CDL skills test, receive a Michigan Department of State Driver Skills Test Certificate (TPT-010) only from the approved third party driver skills test organization. Third party organizations are prohibited from releasing any other test documentation except the skills test certificate.
- Take the skills test certificate directly to any SOS branch office to receive your full privilege CDL. You must redeem your certificate within one (1) year from date of issuance. After one year, you must take all CDL tests again.
- Pay a correction fee to add the CDL privileges to your license and obtain your temporary CDL.
- Receive your photo CDL in the mail within about ten (10) business days.

The CDL skills test consists of three separate tests. They are administered in the following order:

- The Vehicle Inspection Test.
- The Off-Road Basic Control Skills Test.
- The On-Road Driving Test.

Each test must be passed before continuing on to the next test. A failure of any one of the CDL skills tests terminates testing. On subsequent attempts, you must start over from the beginning of the test (vehicle inspection test) regardless of which test you failed. You are allowed one (1) attempt per day.

During the tests, you will be evaluated on your knowledge and skills. ***Do not*** be concerned when the examiner marks the scoring form, since it does not necessarily mean you have done anything wrong.

Sections 10-12 outlines the criteria which will be used to evaluate your knowledge and skills.

Third Party Driver Skills Test Administration:

In Michigan, state or federal laws mandate all driver testing. The Department of State administers driver knowledge (written) tests only through a branch office. Driver road test services are provided only through a privatized third party testing program. This program utilizes a statewide network of public and private organizations certified by the Department to conduct the driver skills tests. The Department is committed to assuring that driver tests (both written and skills) are given by qualified persons trained to administer the tests in a fair, honest and a reliable manner.

Applicants should know the test procedures and time involved for each class of driver skills test. The following study guides are available at any Secretary of State branch office. Each study guide contains the required elements for each test type:

- ***Road Skills Test Study Guide*** (SOS-360, automobile tests)
- ***Motorcycle Operator Manual*** (SOS-116, motorcycle tests)
- ***Commercial Driver License Manual*** (TS-004, bus and truck tests)

Drivers should question any skills test that does not include all the test components as described in the appropriate study guide. Following is a table that shows the required skills test elements and approximate times needed for each test type. The allotted times are estimated minimums based on an average length driving route, good weather conditions, light traffic and a well-prepared driver. Skills tests must have all the segments listed below and may take longer, but not take significantly less time to complete.

TEST TYPE	VEHICLE INSPECTION	BASIC CONTROL SKILLS	DRIVING TEST	TOTAL TIME
Motorcycle	5 minutes (not scored)	10 minutes (scored)	N/A	15 minutes
Automobile	5 minutes (not scored)	10 minutes (scored)	30 minutes (scored)	45 minutes
CDL Group A	50 minutes (scored)	20 minutes (scored)	50 minutes (scored)	2 hours
CDL Group B	30 minutes (scored)	20 minutes (scored)	40 minutes (scored)	1 hour 30 minutes
CDL Group C	20 minutes (scored)	20 minutes (scored)	40 minutes (scored)	1 hour 20 minutes

During the test, certified examiners must always:

- Read standard instructions for each part of the test (a list of instructions is provided for this purpose).
- Use only Department approved forms and test procedures.
- Use only Department approved off-street exercises and on-street driving test routes.

Any third party organization or examiner who intentionally misrepresents a driver skills test by omitting any driver testing requirement or procedure or participates in any illegal activity related to driver licensing, is subject to severe penalties including loss of the testing certification, criminal prosecution and restitution for monetary damages to the test applicant and/or the Department.

Any person (not limited to the driver applicant) who knowingly encourages, facilitates or participates in improper, illegal or fraudulent driver testing is also subject to criminal prosecution.

Any person found to have been improperly, illegally or fraudulently tested must take the test(s) again. The applicant or third party organization will be liable for the costs associated with retesting.

Improper, fraudulent or unlawful driver license tests result in illegal license applications. The ***Michigan Vehicle Code*** (P.A. 300 of 1949) includes the following language concerning illegal driver testing:

- A person who makes a false certification regarding any driver license application is guilty of a felony.
- A person who bribes or attempts to corrupt a person or agency that conducts a driving test under an agreement entered into with the Secretary of State with the intent to influence the opinion or decision of the person or agency conducting the driving test is guilty of a felony.
- A designated examining officer appointed or designated by the secretary of state who conducts a driving test under an agreement entered into with the Secretary of State and who varies from, shortens, or in any other way changes the method or examination criteria prescribed under that agreement is guilty of a felony.
- A person who forges, counterfeits, or alters a driving test certification issued by a designated examining officer appointed or designated by the Secretary of State is guilty of a felony.

A felony committed under these laws shall be punished by imprisonment for not less than one year nor more than five years and fines up to $5,000.00 for the first offense. Subsequent convictions result in additional penalties.

Third Party Test Organization Business Requirements:

Third party test organizations must adhere to certain business practices and administer road skills tests according to established standards and procedures contained in a formal, legal agreement with the Department. Among many contract requirements, third party test organizations must:

- Be approved by the Department before testing services are offered.
- Maintain an established place of business and obtain written permission to use all approved test sites.
- Display a sign with the test organization name at all approved test sites.
- Respond to all driver testing service inquiries within (24) hours (excluding weekends and holidays).
- Publish a printed fee policy and provide receipts (actual fees are not regulated by law).
- Accept personal checks and maintain a surety bond if deposits are collected.
- Ensure examiners pass all required training and obtain Department certification before giving tests.
- Require examiners adhere to Department dress code standards and display Department approved photo identification during tests.

Reporting Improper, Illegal or Fraudulent Test Activities:

Improper, illegal or fraudulent driver testing activity should be reported immediately to the Michigan Department of State. Information needed includes the name(s) of the person(s) and organization(s) involved, the date(s) of the incident(s) and a detailed description of the activity observed or discussed. All legitimate reports will be investigated. **A written statement may be required.** The information should be submitted to:

Michigan Department of State
Driver Training and Testing Division
PO Box 30163
Lansing, MI 48909-7663
Phone (517) 241-6888 Fax (517) 241-6852

Section 10: Vehicle Inspection Test

This Section Covers

- ✔ Scoring For The Internal and External Vehicle Inspections

During the vehicle inspection, you must show that the vehicle is safe to drive. You will walk around the vehicle and point to or touch each item and ***explain*** to the examiner what you are checking and why. You will NOT have to crawl under the vehicle.

You may use the ***Vehicle Inspection Memory Aid*** during this part of the test. The memory aid (Appendix C) is located on the last page of this manual. You **cannot** use other notes or aids.

Study the following vehicle component scoring standards that pertain to the type of vehicle you will be using for the CDL skills tests. Practice recognizing the various vehicle parts and talking about the safety related procedures or defects to look for. You must be able to locate and identify each component and verbalize or demonstrate the key details from each scoring standard to receive credit for properly inspecting the item. You must receive credit for at least (80) percent of the items pertaining to your vehicle to pass the vehicle inspection test segment.

10.1 All Vehicles

Engine Compartment (Engine Off)

Leaks/Hoses

- ✔ Look for fluid puddles on the ground (engine oil, coolant, transmission fluid or other vehicle fluids).
- ✔ Look for dripping fluids in the engine compartment and on the underside of the engine and transmission.
- ✔ See that engine hoses are secure and not cracked, worn or leaking.

Oil Level

- ✔ Indicate where dipstick is located.
- ✔ See that oil level is within safe operating range. Level must be above refill line.

Coolant Level

- ✔ Inspect reservoir sight glass, or coolant recovery reservoir level, or
- ✔ (If engine is not hot), remove radiator cap and check for visible coolant level.

Power Steering Fluid

- ✔ Indicate where power steering fluid dipstick is located. Reservoir is mounted securely and not leaking.
- ✔ Check for adequate power steering fluid level. Level must be above refill mark.

Engine Compartment Belts and Components

- ✔ Identify and check the following belts for snugness (no more than 3/4 inch play at center of belt), cracks or frays.

- Power steering belt.
- Water pump belt.
- Alternator belt.
- Air compressor belt.
- Serpentine belt.

✔ If equipped, identify and check the following engine component(s) are secured to the engine and are not damaged, leaking, or missing parts:

- Water pump ***and*** fan assembly.
- Alternator or generator.
- Air compressor.

Cab Check/Engine Start

Clutch/Gearshift

✔ Depress clutch.

✔ Place gearshift lever in neutral (or park, for automatic transmissions).

✔ Start engine, then release clutch slowly.

Oil Pressure Gauge

✔ Make sure oil pressure gauge is working.

✔ Check that oil pressure gauge shows increasing or normal oil pressure or that the warning light goes off.

✔ If equipped, oil temperature gauge should begin a gradual rise to the normal operating range.

Temperature Gauge

✔ Make sure the temperature gauge is working.

✔ Temperature should begin to climb to the normal operating range or temperature light should be off.

Ammeter/Voltmeter

✔ Check the gauges show alternator and/or generator is charging or that warning light is off.

Mirrors and Windshield

✔ Mirrors should be clean and adjusted properly when viewed from the ***inside***.

✔ Windshield should be clean with no illegal stickers, no obstructions or damage to the glass.

Emergency Equipment

✔ Check for spare electrical fuses.

✔ Check for three red reflective triangles.

✔ Check for a properly secured, charged and rated fire extinguisher.

Note: If the vehicle is equipped with circuit breakers rather than electrical fuses, you must mention this to the examiner.

Steering Play

✔ ***Non-power steering:*** Check for excessive play by turning steering wheel back and forth. Play should not exceed 10 degrees (or about two inches on a 20-inch wheel).

✔ ***Power steering:*** With the engine running, check for excessive play by turning the steering wheel back and forth. Play should not exceed 10 degrees (or about two inches on a 20-inch wheel) before front left wheel barely moves.

- ✔ With the engine off, steering play can be checked under the hood by rotating the steering column shaft back and forth while observing movement of the steering wheel and left front tire.

Wipers/Washers

- ✔ Check that wiper arms and blades are secure, not damaged and the wipers operate smoothly and clear the windshield properly on all speeds.
- ✔ If equipped, windshield washers must operate correctly.

Lighting Indicators

- ✔ Test that dash indicator lights work when corresponding external lights are turned on:
  - Left turn signal.
  - Right turn signal.
  - 4-way emergency flashers.
  - High beam headlight.
  - Strobe indicator (if equipped).

Horn

- ✔ Check that air horn and/or electric horn work.

Heater/Defroster

- ✔ Test that the heater and defroster controls and fans work on all speeds. This must be done regardless of the weather.

Parking Brake Check

- ✔ Apply parking brake ***only*** and make sure that it will hold the vehicle by shifting into a lower gear and gently pulling against the brake.

Hydraulic Brake Check

- ✔ With the ***engine running***, pump the brake pedal three times, then hold the pedal down for five seconds. The brake pedal should not move (depress) during the five seconds.
- ✔ If equipped with a hydraulic brake reserve (back-up) system, with the key off, depress the brake pedal and listen for the sound of the reserve system electric motor.
- ✔ Check that the warning buzzer or light is off.

Air Brake Check (air brake-equipped vehicles only)

- ✔ **Failure to perform correctly at least one portion of the air brake check will result in an automatic failure of the vehicle inspection test.** Air brake safety devices vary. However, this procedure is designed to see that any safety device operates correctly as air pressure drops from normal to a low air condition. For safety purposes, in areas where an incline is present, you will use wheel chocks during the air brake check. The proper procedures for inspecting the air brake system are as follows:
  - With the engine running, build the air pressure to governed cut-out (100-125 psi). **Shut off the engine.** Release (push in) the tractor protection valve and the parking brake valve, fully apply the foot brake, and hold it for one minute. Check the air gauge to see if the air pressure drops more than ***three*** pounds in one minute ***(single vehicle)*** or ***four*** pounds in one minute ***(combination vehicle)***.
  - Turn the key to the “on” position without starting the engine and begin fanning off the air pressure by rapidly applying and releasing the foot brake. Low air warning devices (buzzer, light, flag) should activate before air pressure drops below 60 psi.
  - Continue to fan off the air pressure. Between approximately 20-40 psi on a tractor-trailer combination vehicle, the tractor protection valve and parking brake valve should close (pop out). On other combination vehicle types and single vehicle types, the parking brake valve should close (pop out).

Safety Belt

- ✔ Check that the safety belt is securely mounted, adjusts and latches properly.

Lights/Reflectors

- ✔ Check that ***all*** external lights and reflective equipment are mounted securely, clean, not damaged, and working. Light and reflector checks include:
  - Clearance (marker) lights (red on rear, amber elsewhere).
  - Headlights (high and low beams).
  - Taillights.
  - Turn signals.
  - 4-way flashers.
  - Brake lights.
  - Reflectors (red on rear, amber elsewhere).
  - Strobe light (if equipped).

Note: Checks of brake, turn signal and four-way flasher functions must be done separately.

10.2 Bus/School Bus/Truck/Tractor

Steering

Steering Box/Hoses

- ✔ Check that the steering box is securely mounted and not leaking. Look for any missing nuts, bolts and cotter keys.
- ✔ Check power steering hoses for fluid leaks or damage.

Steering Linkage

- ✔ See that connecting shaft, links, arms and rods from the steering wheel to the steering box ***and*** from the steering box to the front wheels are not worn, cracked or bent.
- ✔ Check that joints and sockets are not worn or loose and that there are no missing nuts, bolts, or cotter keys.

Suspension

Springs/Air/Torque

- ✔ Look for missing, shifted, cracked or broken leaf springs.
- ✔ Look for broken or distorted coil springs.
- ✔ If vehicle is equipped with torsion bars, torque arms, or other types of suspension components, check that they are not shifted, bent or damaged and are mounted securely.
- ✔ Air ride suspension components should be secured and not damaged or leaking.

Mounts

- ✔ Look for cracked or broken spring hangers, missing or damaged bushings, and broken, loose or missing bolts, U-bolts or other axle mounting parts. The suspension mounts should be checked at each point where they are secured to the vehicle frame and axle(s) (front, center and rear).

Shock Absorbers

- ✔ See that shock absorbers are secure, not damaged, and not leaking.

Note: Be prepared to perform the same suspension components inspection on every axle (power unit and trailer, if equipped).

Brakes

Slack Adjustors

- ✔ Look for broken, loose or missing parts.
- ✔ The angle between the push rod and adjustor arm should be a little over 90 degrees when the brakes are released, and not less than 90 degrees when the brakes are applied.
- ✔ When pulled by hand, the brake rod should not move more than one inch (with the brakes released).

Brake Chambers

- ✔ See that brake chambers are not leaking, cracked or dented, and are mounted securely.

Brake Hose/Lines

- ✔ Look for cracked, worn, or leaking hoses (or lines) and for secure couplings.

Note: Be prepared to perform the same brake components inspection on every axle (power unit and trailer, if equipped).

Wheels

Rims

- ✔ Check for damaged or bent rims. Rims cannot have welding repairs.

Discs/Drums/Linings

- ✔ Check that disc brake assembly and/or brake drums are secured to the wheel and are not cracked, dented or damaged with no loose or missing parts. See that brake linings (shoes or pads) are not worn dangerously thin. Brakes are free of contaminants such as grease, oil, and brake fluid.

Tires

- ✔ The following items must be inspected on ***every*** tire:
  - **Tread depth:** Check for a minimum tread depth (4/32 on steering axle tires, 2/32 on all other tires).
  - **Tire condition:** Check that tread is evenly worn and look for cuts or other damage to tread or sidewalls. Also, make sure that valve caps and stems are not missing, broken, or damaged.
  - **Tire inflation:** Check for proper inflation by using a tire gauge or by striking tires with a mallet or other similar device.

Note: You will not get credit if you simply kick the tires to check for proper inflation.

Hub Oil Seals/Axle Seals

- ✔ See that hub oil/grease seals and axle seals are not leaking and, if wheel has a sight glass, oil level is adequate.
- ✔ Check for cracks or distortions in wheel/axle mounting.

Lug Nuts

- ✔ Check that all lug nuts are present, free of cracks and distortions, and show no signs of looseness. such as rust trails or shiny exposed threads.
- ✔ Make sure all bolt holes are not cracked or distorted.

Spacers

- ✔ If equipped, check that spacers are not bent, damaged, or rusted through.
- ✔ Spacers should be evenly centered, with dual wheels and tires evenly separated.

Note: Be prepared to perform the same wheel inspection on every axle (power unit and trailer, if equipped).

Side of Vehicle

Door(s)/Mirror(s)

- ✔ Check that door(s) are not damaged and that they open and close properly from the ***outside***.
- ✔ Hinges should be secure with seals intact.
- ✔ Check that mirror(s) and mirror brackets are not damaged and mounted securely with no loose fittings.

Fuel Tank

- ✔ Check that fuel tank(s) are secure, not damaged, cap(s) are tight, and that there are no leaks from tank(s) or lines.

Battery/Box

- ✔ Wherever located, see that batteries are secure, connections are tight and cell caps are present.
- ✔ Battery connections should not show signs of excessive corrosion.
- ✔ Battery box ***and*** cover or door are not damaged and are secure.

Drive Shaft

- ✔ See that drive shaft is not bent or cracked. Safety loops are not bent or damaged and are mounted securely.
- ✔ Couplings should be secured and free of foreign objects.

Exhaust System

- ✔ Check system for damage (cracks, holes, dents, etc.) and signs of leaks such as rust or carbon soot.
- ✔ System should be connected tightly and mounted securely.

Frame

- ✔ Look for cracks, broken welds, holes, or other damage to the longitudinal frame members, cross members, box ***and*** floor.

Rear of Vehicle

Splash Guards

- ✔ If equipped, check that splash guards or mud flaps are not damaged and are mounted securely.

Doors/Ties/Lifts

- ✔ Check that doors and hinges are not damaged and that they tie open, close, and latch properly from the ***outside***, if equipped.
- ✔ Ties, cargo straps, chains, binders, and cargo tie-down points (if equipped) are secure and not damaged.
- ✔ If equipped with a cargo lift, look for leaking, damaged, or missing parts and explain how it should be checked for correct operation.
- ✔ Lift must be fully retracted and latched securely.

Tractor/Coupling

Air/Electric Lines

- ✔ Listen for air leaks. Check that air hoses and electrical lines are not cut, chafed, spliced, or worn (steel braid should not show through).
- ✔ Make sure air and electrical lines are not tangled, pinched or dragging against tractor parts.

Catwalk

- ✔ Check that the catwalk is solid, clear of objects, and securely bolted to tractor frame.

Mounting Bolts

- ✔ Look for loose or missing mounting brackets, clamps, bolts, or nuts. Both the fifth wheel and the slide mounting must be solidly attached to the frame.
- ✔ On other types of coupling systems (i.e., ball hitch, pintle hook, etc.), inspect ***all*** coupling components and mounting brackets for missing or broken parts.

Locking Jaws

- ✔ Look into fifth wheel slot and check that locking jaws are fully closed around the kingpin.
- ✔ On other types of coupling systems (i.e., ball hitch, pintle hook, etc.), inspect the locking mechanism for missing or broken parts, and make sure it is locked securely. If present, safety cables or chains must be secure and free of kinks and excessive slack.

Platform (fifth wheel)

- ✔ Check for cracks or breaks in the platform structure which supports the fifth wheel skid plate.

Release Arm (fifth wheel)

- ✔ If equipped, make sure the release arm is in the engaged position and the safety latch is in place.

Kingpin/Apron/Gap (fifth wheel)

- ✔ Check that the kingpin is not bent.
- ✔ Make sure the visible part of the trailer apron is not bent, distorted, cracked, or broken.
- ✔ Check that the trailer apron is lying flat on the fifth wheel skid plate with no visible gap.

Locking Pins (fifth wheel)

- ✔ If equipped, look for loose or missing pins in the slide mechanism of the sliding fifth wheel. If air powered, check for leaks.
- ✔ Make sure locking pins are fully engaged.
- ✔ Check that the fifth wheel is positioned properly so that the tractor frame will clear the landing gear during turns.

10.3 Trailer

Trailer Front

Air/Electrical Connections

- ✔ Check that trailer air connectors are sealed and in good condition on both the tractor and trailer.
- ✔ Make sure glad hands are locked in place, free of damage, or air leaks.

- ✔ Make sure the trailer electrical plug is firmly seated and locked in place on both the tractor and trailer.

Header Board

- ✔ if equipped, check the header board to see that it is secure, free of damage, and strong enough to contain cargo.
- ✔ If equipped, the canvas or tarp carrier must be mounted and fastened securely.
- ✔ On enclosed trailers, check the front area for signs of damage such as cracks, bulges, or holes.

Side of Trailer

Landing Gear

- ✔ Check that the landing gear is fully raised, has no missing parts, crank handle is secure, and the support frame and landing pads are not damaged.
- ✔ If power operated, check for air or hydraulic leaks.

Doors/Ties/Lifts

- ✔ If equipped, check that doors are not damaged. Check that doors tie open, close, and latch properly from the ***outside***.
- ✔ Check that door ties, and cargo straps, chains, binders, and cargo tie-down points are secure and not damaged.
- ✔ If equipped with a cargo lift, look for leaking, damaged, or missing parts and explain how it should be checked for correct operation.
- ✔ Lift should be fully retracted and latched securely.

Frame

- ✔ Look for cracks, broken welds, holes, or other damage to the frame, cross members, box ***and*** floor.

Tandem Release Arm/Locking Pins

- ✔ If equipped, ensure the locking pins are locked in place (fully engaged) and release arm is secured.

Remainder of Trailer

- ✔ Please refer to Section 10.2 of this manual for detailed inspection procedures regarding the following components:
  - Wheels.
  - Suspension system.
  - Brakes.
  - Doors/ties/lift.
  - Splash guards

10.4 School Bus Only

Emergency equipment

- ✔ In addition to checking for spare electrical fuses (if equipped), three red reflective triangles and a properly charged and rated fire extinguisher, school bus drivers must also inspect the following emergency equipment:

- Three red-burning flares (fusees), and
- A nine-item first-aid kit.

Lighting Indicators

✔ In addition to checking the internal lighting indicators listed in Section 10.2 of this manual, school bus drivers must also check the following lighting indicators (internal panel lights):

- Alternately flashing amber lights indicator, if equipped.
- Alternately flashing red lights indicator.
- Strobe light indicator, if equipped.

Lights/Reflectors

✔ In addition to checking the lights and reflective devices listed in Section 10.2 of this manual, school bus drivers must also check the following external lights and reflectors:

- Strobe light (if equipped).
- Stop arm lights (if equipped).
- Alternately flashing amber lights (if equipped).
- Alternately flashing red lights.

Stop Arm/Crossing Arm

✔ If equipped, check that stop arm ***and*** crossing arm are secured to the vehicle. Also, check for loose, missing or damaged parts and observe proper operation.

Passenger Entry/Lift

✔ Check that the entry door is not damaged, operates smoothly and closes securely from the ***inside***.

✔ Hand rails are secure and the step light is working (if equipped).

✔ The entry steps must be clear with the treads not loose or worn excessively.

✔ If equipped, check the handicap lift for leaking, damaged or missing parts, and explain how the lift is checked for correct operation. Lift must be fully retracted and latched securely.

Emergency Exit

✔ Make sure that ***all*** emergency exits (doors, hatches, and windows) are not damaged, operate smoothly, and close securely from the ***inside***.

✔ Check that any emergency exit warning devices are working.

Seating

✔ Look for broken seat frames and check that seat frames are firmly attached to the floor.

✔ Check that seat cushions are attached securely to the seat frames.

10.5 Coach/Transit Bus

Passenger Items

Passenger Entry/Lift

✔ Check that entry doors operate smoothly and close securely from the ***inside***.

✔ Check that hand rails are secure, and if equipped, that the step light(s) are working.

✔ Check that the entry steps are clear, with the treads not loose or excessively worn.

- ✔ If equipped with a handicap lift, look for any leaking, damaged, or missing parts, and explain how it should be checked for correct operation.
- ✔ Lift should be fully retracted and latched securely.

Emergency Exits

- ✔ Make sure that all emergency exits (doors, hatches, and windows) are not damaged, operate smoothly, and close securely from the ***inside***.
- ✔ Check that any emergency exit warning devices are working.

Passenger Seating

- ✔ Look for broken seat frames and check that seat frames are firmly attached to the floor.
- ✔ Check that seat cushions are attached securely to the seat frames.

Entry/Exit

Doors/Mirrors

- ✔ Check that entry/exit doors are not damaged and operate smoothly from the ***outside***. Hinges should be secure with seals intact.
- ✔ Make sure that the internal passenger entry/exit mirrors ***and*** all external mirrors and mirror brackets are not damaged and are mounted securely with no loose fittings.

External Inspection of Coach/Transit Bus

Level/Air Leaks

- ✔ See that the vehicle is sitting level, indicating no apparent damage to springs, spring mounts, shocks or other suspension components (front and rear). If air-ride equipped, check for audible air leaks from the air suspension system air bags.

Fuel Tank(s)

- ✔ See that fuel tank(s) are secure and not damaged, with no leaks from tank(s) or lines.

Compartments

- ✔ Check that baggage and all other exterior compartments and doors are not damaged, operate properly, and latch securely.

Battery/Box

- ✔ Wherever located, see that batteries are secure, connections are tight, and cell caps are present.
- ✔ Battery connections should not show signs of excessive corrosion.
- ✔ Check that battery box ***and*** cover or door is not damaged and is secure.

Remainder of Coach/Transit Bus

Remainder of Vehicle

- ✔ Please refer to Section 10.2 of this manual for detailed inspection procedures regarding the following components:
  - Wheels.

Remember, the pre-trip vehicle inspection must be passed before you can proceed to the basic control skills tests.

Section 11: Basic Vehicle Control Skills Test

This Section Covers

- ✔ Basic Vehicle Control Skills Test Exercises
- ✔ Scoring For The Basic Vehicle Control Skills Test

The basic vehicle control skills test consist of four basic off-road exercises.

- ✔ Forward stop.
- ✔ Straight line backing.
- ✔ Alley dock.
- ✔ Right turn.

These exercises are shown in Figures 11-1 through 11-4.

11.1 Scoring

Crossing Boundaries

The examiner will score the number of times you touch or cross over an exercise boundary line or any part of a cone with any portion of your vehicle. Each encroachment will count as an error.

Pull-ups

In some of the exercises, the examiner will also score the number of times you stop your vehicle and change direction (or pull-up) during the exercise. Each pull-up will count as an error.

Final Positioning

At the end of each exercise, the examiner will assess how well your vehicle is positioned within the exercise boundaries.

Passing Score

Errors will be explained to you prior to the beginning of the exercises. The passing score for the basic vehicle control skills test segment is nine (9) or less errors.

11.2 Exercises

Forward stop

You will be asked to drive forward between two rows of cones and bring your vehicle to a complete stop as close as you can to the exercise boundary marked by an end line and a set of cones (without touching or going beyond the line or cones). You may only stop once, and you cannot open your door,

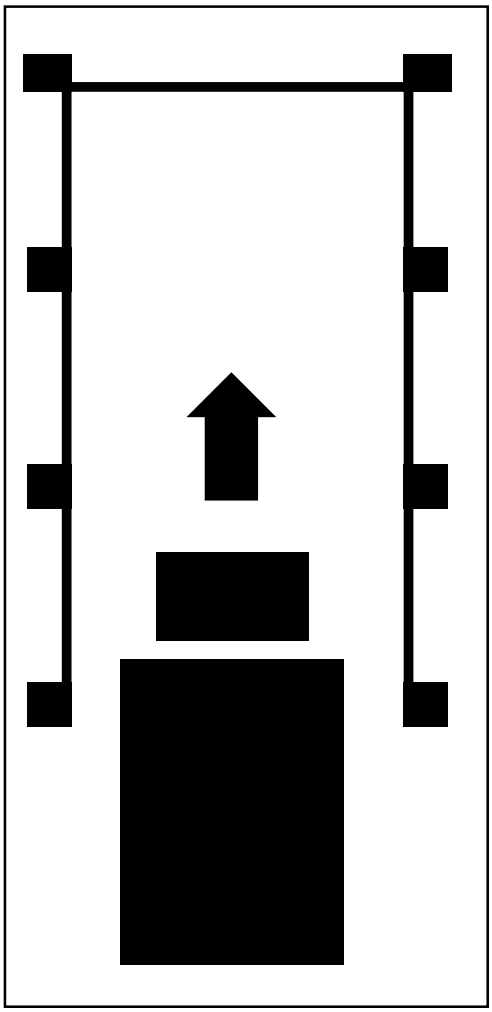

Figure 11-1

Forward Stop

lean out the window or stand up to improve your view. You will be scored on how close your vehicle finishes near the stop line at the end of the alley without touching or going beyond it. (See Figure 11-1.)

Straight Line Backing

You will be asked to back your vehicle in a straight line between two rows of cones without touching or crossing over the exercise boundaries. You will be scored on the number of pull-ups and encroachments you make while backing your vehicle through the alley. (See Figure 11-2.)

Alley Dock

You will be asked to sight-side back your vehicle (from a 90-degree angle) into an alley, bringing the rear of your vehicle as close as possible to the rear of the alley without touching or crossing over any exercise boundary marked by a line or row of cones. (See Figure 11-3.)

Right Turn

You will be asked to drive forward and make a right turn around a cone, bringing the right rear wheel(s) of your vehicle as close as possible to the cone without touching or crossing over the foot of the cone with any part of your vehicle. The examiner scores the number of pull-ups, encroachments and the amount of clearance your vehicle has as your right rear wheel(s) pass by the cone. (See Figure 11-4.)

Remember, you must pass the pre-trip vehicle inspection and the basic vehicle control skills test before proceeding to the driving test.

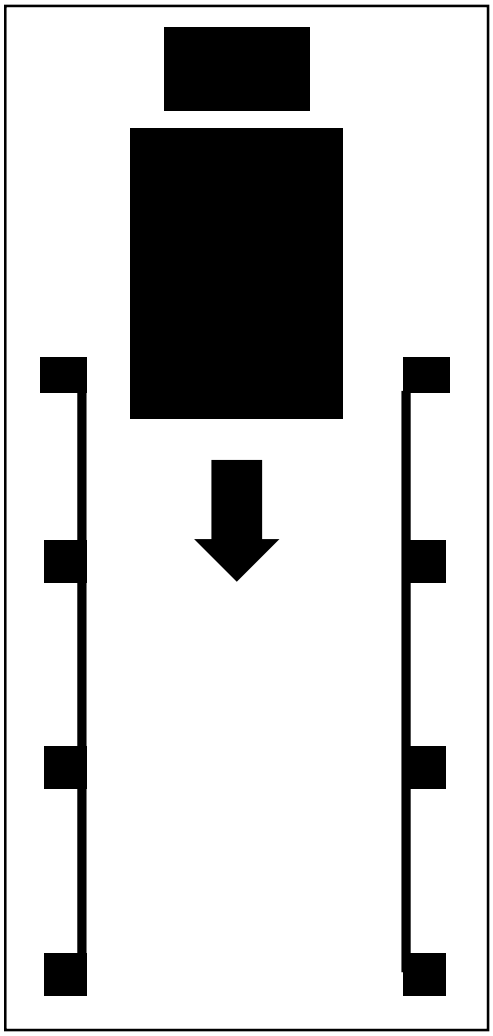

Figure 11-2

Straight Line Backing

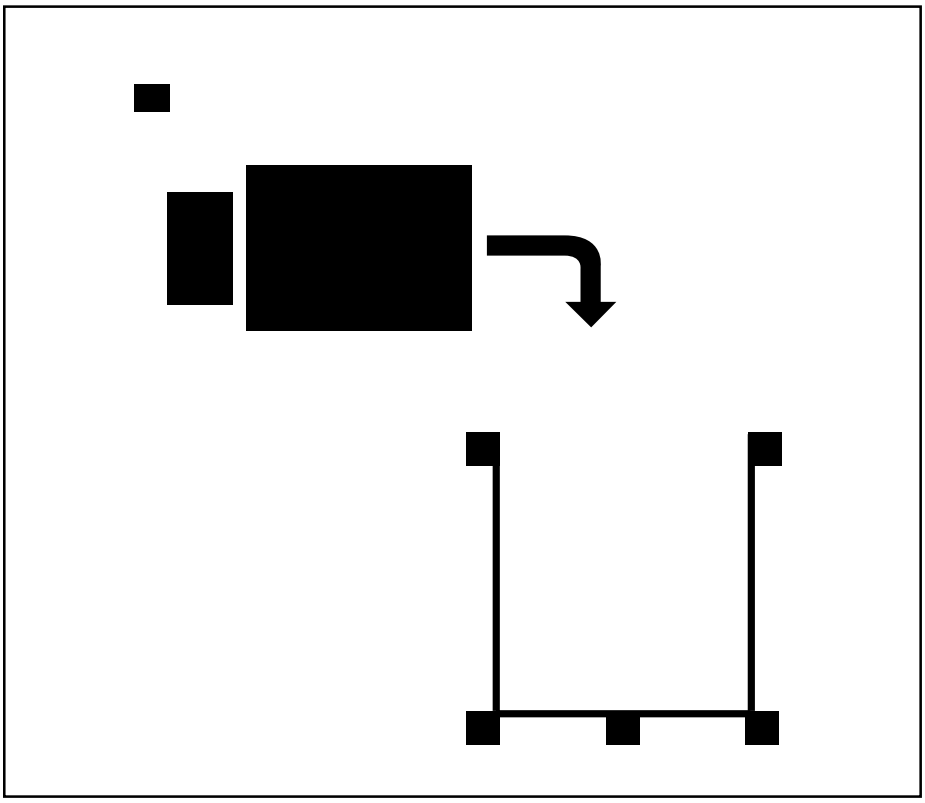

Figure 11-3

Alley Dock

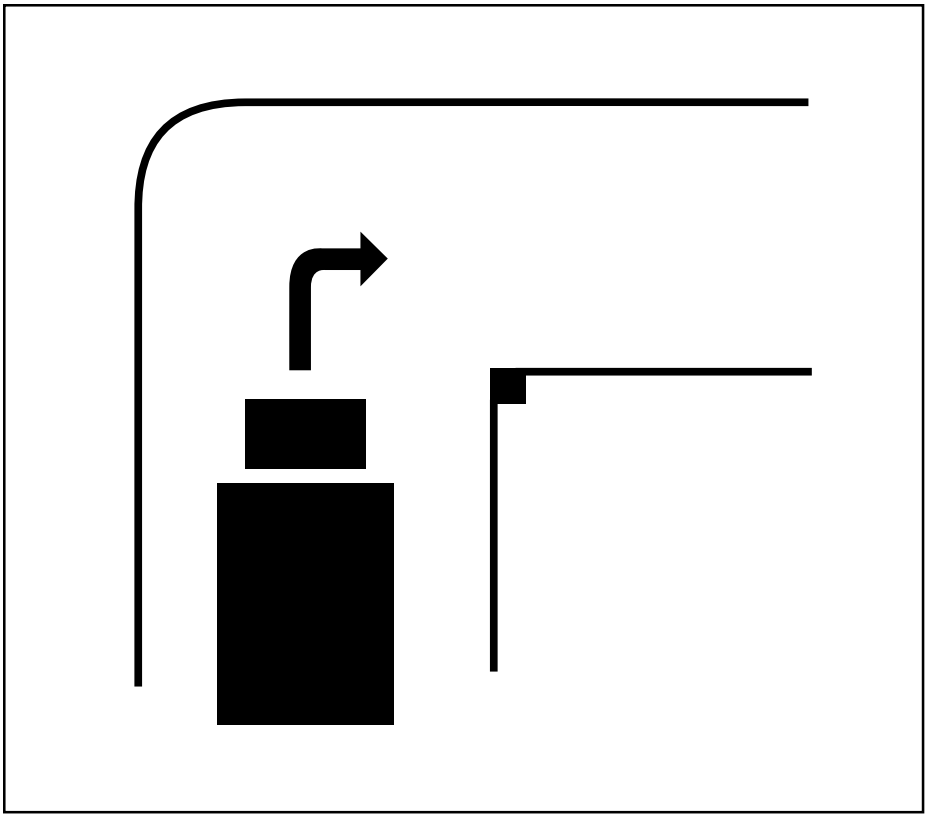

Figure 11-4

Right Turn

Section 12: On-Road Driving Test

This Section Covers

- ✔ Scoring For The On-Road Driving Test

You will be required to demonstrate your ability to drive safely over a predetermined route containing a variety of traffic situations. At all times during the driving test, you must operate your vehicle in a safe and responsible manner according to the current regulatory, traffic, and weather conditions on your route.

During the driving test, the examiner will be observing and scoring you on specific maneuvers as well as on your general driving behavior. You will be expected to drive straight ahead and stay in the far right lane unless given instructions to turn or to perform other maneuvers. The examiner will give directions for each maneuver as far in advance as possible and will not ask you to do anything illegal or unsafe.

If your test route does not have certain traffic situations, you may be asked to simulate a traffic situation. You will do this by demonstrating or telling the examiner what you are or would be doing if you were in that traffic situation.

Following are the requirements for specific maneuvers and general driving behaviors that will be evaluated during the driving test. The passing score for the driving segment is (25) or fewer errors.

12.1 How You Will Be Tested

Turns

You have been asked to make a turn:

- ✔ Check traffic in all directions by looking in your mirrors and moving your head.
- ✔ Use turn signals and safely get into the lane needed for the turn.

As you approach the turn:

- ✔ Use turn signals to warn others of your turn.
- ✔ Slow down smoothly, change gears as needed to keep power, but do not coast unsafely. Unsafe coasting occurs when your vehicle is out of gear (clutch depressed or gearshift in neutral) for more than the length of your vehicle.

If you must stop before making the turn:

- ✔ Come to a smooth stop without skidding.
- ✔ Come to a complete stop behind the stop line, crosswalk, sidewalk or stop sign.
- ✔ If stopping behind another vehicle, stop at a safe distance where you can see, at a minimum, the rear tires on the vehicle ahead of you (safe gap).
- ✔ Do not let your vehicle roll.
- ✔ Keep the front wheels aimed straight ahead.

When ready to turn:

- ✔ Check traffic in all directions by looking in your mirrors and moving your head.
- ✔ Keep both hands on the steering wheel during the turn.

- Try not to change gears during the turn.
- Keep checking mirrors to make sure the vehicle does not hit anything on the inside of the turn.
- Vehicle should not move into oncoming traffic.
- Yield to any traffic or pedestrians in the intersection.
- When turning left from a single left-turn lane, your vehicle should finish the turn in the lane which is ***directly*** to the right of the center line.
- When turning right, your vehicle should finish the turn in the right-most (curb) lane.

After turn:

- Immediately check traffic in all directions by looking in your mirrors and moving your head.
- Make sure turn signal is off.
- Get up to speed of traffic, use turn signal, and move into right-most lane when safe to do so.

Intersections

As you approach an intersection:

- Check traffic thoroughly in all directions by looking in your mirrors and moving your head.
- Decelerate gently.
- Brake smoothly and, if necessary, change gears.
- If necessary, come to a complete stop (no coasting) behind any stop signs, signals, sidewalks, or stop lines, maintaining a safe gap behind any vehicle in front of you.
- Your vehicle must not roll forward or backward.

When driving through an intersection:

- Check traffic thoroughly in all directions by moving your head.
- Decelerate and yield to any pedestrians and traffic in the intersection.
- ***Do not*** change lanes and try not to shift gears while proceeding through the intersection.
- Keep your hands on the wheel.

Once through the intersection:

- Continue checking traffic by looking in your mirrors and moving your head.
- Accelerate smoothly and change gears as necessary.

Urban/Rural Straight

During this part of the test, you are expected to make regular traffic checks by looking in your mirrors and moving your head. Always maintain a safe following distance. Your vehicle should be centered in the proper lane (right-most lane) and you should keep up with the flow of traffic but ***not exceed*** the posted speed limit.

Urban/Rural Lane Changes

During the multiple lane portion of the urban and rural sections, you will be asked to change lanes to the left, and then back to the right. You should make the necessary traffic checks first by looking in your mirrors and moving your head, then use proper signals and smoothly change lanes when safe to do so.

Expressway

Before entering the expressway:

- ✔ Check traffic by looking in your mirrors and moving your head.
- ✔ Use proper signals.
- ✔ Merge smoothly into the proper lane of traffic. Stay within lane markings.

Once on the expressway:

- ✔ Maintain proper lane positioning, vehicle spacing, and vehicle speed.
- ✔ Continue to check traffic thoroughly in all directions by looking in your mirrors and moving your head.

You will be instructed to change lanes to the left, and then back to the right:

- ✔ You must make necessary traffic checks by looking in your mirrors and moving your head.
- ✔ Use proper signals.
- ✔ Change lanes smoothly when it is safe to do so.

When exiting the expressway:

- ✔ Make necessary traffic checks by looking in your mirrors and moving your head.
- ✔ Use proper signals.
- ✔ Decelerate smoothly, brake evenly and change gears as necessary in the exit lane. Do not coast.
- ✔ Once on the exit ramp, you must continue to decelerate within the lane markings, and maintain adequate spacing between your vehicle and other vehicles.

Stop/Start

For this maneuver, you will be asked to pull your vehicle over to the side of the road and stop as if you were going to get out and check something on your vehicle. You must check traffic thoroughly in all directions, use your turn signal, and move to the right-most lane or shoulder of road.

As you prepare for the stop:

- ✔ Check traffic by looking in your mirrors and moving your head.
- ✔ Activate your right turn signal.
- ✔ Decelerate smoothly, brake evenly, change gears as necessary.
- ✔ Bring your vehicle to a full stop without coasting, leaving your foot brake applied and clutch pedal down.

Once stopped:

- ✔ Vehicle must be parallel to the curb or shoulder of the road and safely out of the traffic flow.
- ✔ Vehicle should not be blocking driveways, fire hydrants, intersections, signs, etc. Do not park in areas of limited sight distance (curves, hills, etc.).
- ✔ Cancel your turn signal.
- ✔ Activate your 4-way emergency flashers.
- ✔ Move the gear shift to neutral or park.
- ✔ Apply the parking brake.
- ✔ Remove your feet from the brake and clutch pedals.

When instructed to resume:

- ✔ Check traffic and your mirrors thoroughly in all directions before moving your vehicle.
- ✔ Turn off you 4-way flashers.
- ✔ Activate the left turn signal.
- ✔ When traffic permits, you should release the parking brake and pull straight ahead.
- ✔ Do not turn the wheel before your vehicle moves.
- ✔ Check traffic again from all directions, especially to the left, by looking in your mirrors and moving your head.
- ✔ Steer and accelerate smoothly into the proper (right-most) lane when safe to do so.
- ✔ Once your vehicle is back into the flow of traffic, cancel your left turn signal.

Curve

When approaching a curve:

- ✔ Check traffic thoroughly in all directions by looking in your mirrors and moving your head.
- ✔ Before entering the curve, reduce speed so further braking or shifting is not required in the curve.
- ✔ Keep vehicle in the lane.
- ✔ Continue checking traffic in all directions.

Upgrade (Verbal Stimulation)

As you **approach** the upgrade:

- ✔ Select the proper gear to maintain speed and not lug or race the engine.
- ✔ Check traffic thoroughly in all directions and move to the right-most or curb lane.
- ✔ Use 4-way flashers if traveling too slowly for the flow of traffic.

Downgrade (Verbal Stimulation)

Before starting down the grade:

- ✔ Downshift as needed to help control engine speed and road speed.
- ✔ Test brakes by gently applying the foot brake to ensure they are functioning properly.
- ✔ As vehicle moves down the grade, continue checking traffic in all directions and stay in the right-most or curb lane.
- ✔ Use 4-way flashers if vehicle is moving too slowly for traffic.
- ✔ Increase following distance and observe the following downhill braking procedures:
    - Select a “safe” speed, one that is not too fast for the weight of the vehicle, length and steepness of the grade, weather and road conditions.
    - Once a “safe” speed has been reached, apply the brake hard enough to feel a definite slowdown.
    - When speed has been reduced to 5 mph below the “safe” speed, release the brakes. This application should last about three [3] seconds.
    - Once speed has increased to the “safe” speed, repeat the procedure.

For example, if your “safe” speed is 40 mph, you should apply the brakes once your vehicle speed reaches 40 mph. Your brakes should be applied hard enough to reduce your speed to 35 mph. Once your vehicle speed reaches 35 mph, release your brakes. Repeat this procedure as often as necessary until you have reached the end of the downgrade. **This braking technique is called “snubbing.”**

When operating any commercial vehicle, **do not** ride the clutch, race the engine, change gears, or coast while driving down the grade. At the bottom of the grade, be sure to cancel your 4-way flashers.

You will be asked to simulate (verbally) driving up and down a steep hill. Therefore, you must be familiar with the upgrade/downgrade procedures so that you can explain and/or demonstrate them to the examiner at any time during the driving test.

Railroad Crossing

Before reaching the crossing, **all** commercial vehicle drivers should:

- ✔ Decelerate, brake smoothly, and shift gears as necessary.
- ✔ Look and listen for the presence of trains.
- ✔ Check traffic in all directions by looking in your mirrors and moving your head.
- ✔ ***Do not*** stop, change gears, pass another vehicle or change lanes while any part of your vehicle is in the crossing.

For drivers operating a school bus, or placarded vehicle for the test — You must be prepared to demonstrate the following railroad crossing stopping procedures at every railroad crossing on the driving test route.

For drivers operating a bus other than a school bus for the test — at one (1) railroad crossing, you will be asked to simulate and/or explain the following railroad crossing stopping procedures for school buses.

For drivers operating a non-placarded truck for the test but applying for the H-hazardous materials endorsement — at one (1) railroad crossing, you will be asked to simulate and/or explain the following railroad crossing stopping procedures for placarded vehicles.

- ✔ As the vehicle approaches a railroad crossing, activate the 4-way flashers.
- ✔ Stop the vehicle within 50 feet but not less than 15 feet from the nearest rail.
- ✔ Listen and look in both directions along the track for an approaching train and for signals indicating the approach of a train.
- ✔ ***School bus drivers must also open the passenger door and driver-side window, turn OFF all interior switches (including fans, heaters, and radios) to look and listen properly for the presence of trains.***
- ✔ Keep both hands on the steering wheel as the vehicle crosses the tracks.
- ✔ Do not stop, change gears, or change lanes while any part of your vehicle is over the tracks.
- ✔ 4-way flashers should be deactivated after the vehicle crosses the tracks.

Not all driving road test routes will have a railroad crossing. You may be asked to explain and demonstrate the proper railroad crossing procedures to the examiner at a simulated location.

Bridge/Overpass/Sign

After driving under an overpass, you may be asked to tell the examiner what the posted clearance was. After going over a bridge, you may be asked to tell the examiner what the posted weight limit was. If your test route does not have a bridge or overpass, you may be asked about another traffic sign. When asked, be prepared to identify and explain to the examiner any traffic sign which may appear on the route.

Off-road Simulated Student Stop (School Bus Only)

According to Michigan law (Public Act 187 of 1990), school bus drivers are not allowed to activate the alternately flashing lights when operating a school bus on a public highway or private road while transporting passengers primarily other than school pupils. Therefore school bus drivers will be asked to simulate a student pick-up at an off-road location.

As you approach the designated student pick-up location:

- ✔ Check traffic in all directions by looking in your mirrors and moving your head.
- ✔ Decelerate smoothly and gently apply the service brake to warn motorists of your impending stop.
- ✔ You ***must*** activate the appropriate signals as required not less than 200 feet from the designated stop (with the 4-light system, activate the alternately flashing red lights; with the eight light system activate the alternately flashing amber lights). ***Note: Failure to perform this portion of the Student Stop exercise will result in an automatic failure of the driving test.***
- ✔ Activate your right turn signal after the alternately flashing lights (red or amber) are on.
- ✔ Stop your vehicle as far to the right as possible (without obstructing the normal flow of traffic) and bring your vehicle to a full stop.

Once stopped:

- ✔ You ***must*** apply the parking brake and shift to neutral or park. ***Note: Failure to perform this portion of the Student Stop exercise will result in an automatic failure of the driving test.***
- ✔ Cancel your right turn signal and open the passenger door when it is safe to do so.
- ✔ With the 8-light system, the alternately flashing red lights activate, and if equipped, the stop arm fully extends when the passenger door is opened.
- ✔ Check traffic in all directions and make sure that all entering pupils are safely seated and that all exiting pupils are safely clear of the vehicle by looking in your mirrors and moving your head.
- ✔ Once you have accounted for all of the entering and exiting pupils, cancel all of your signals and wait for traffic to clear, (traffic dispersal).

Before you resume:

- ✔ Check traffic in all directions by looking in your mirrors and moving your head.
- ✔ Activate your left turn signal.
- ✔ When it is safe to do so, merge smoothly into traffic and cancel your turn signal.

General Driving Behavior

During the driving test, you must:

- ✔ Wear your safety belt.
- ✔ Obey all traffic signs, signals, and laws and drive with due care according to the current traffic and weather conditions.
- ✔ Complete the test without an accident or moving violation.

You will be scored on your overall performance in the following general driving behavior categories:

Clutch Usage

- ✔ If equipped, always use the clutch to shift. Use the double-clutch technique if the vehicle is equipped with a nonsynchronized transmission.
- ✔ Do not rev or lug the engine.
- ✔ Do not ride the clutch to control speed or coast with the clutch depressed.
- ✔ Do not “pop” the clutch.

Gear Usage

- ✔ Do not grind or clash the gears.
- ✔ Do not coast with the gear shift lever in neutral.

- ✔ Select the gear that does not rev or lug the engine.
- ✔ Do not shift in turns and intersections.
- ✔ Be familiar with and verbalize the proper gear technique for driving up and down steep grades. (Refer to Upgrade/Downgrade procedures in this section.)

Brake Usage

- ✔ Do not ride or pump brake. Do not brake harshly. On normal surfaces (level ground), use a light steady brake pressure.
- ✔ Be familiar with and verbalize the “snub braking” technique while driving down steep grades. (Refer to Upgrade/Downgrade procedures in this section.)
- ✔ Be familiar with and demonstrate the proper parking brake procedures during an emergency stop or school bus student stop. (Refer to the Stop/Start and Off-road Simulated Student Stop procedures.)

Steering Technique

- ✔ While driving, keep both hands on the steering wheel.
- ✔ Do not palm the steering wheel or over/under steer the vehicle.
- ✔ Do not let the steering wheel slide freely through hands upon completing a turn.
- ✔ Keep the wheel straight while stopped prior to turning.

Traffic Checks/Search

- ✔ Use all available mirrors and maintain awareness of the entire traffic environment. **Regularly** check surrounding traffic conditions with ***head/body movements*** to the left and right.
- ✔ Always check traffic ***before*** using turn signals, changing lanes, or performing any maneuver.
- ✔ Be able to identify any traffic sign, bridge weight, or overpass clearance when asked by the examiner.

Vehicle Spacing

- ✔ When following another vehicle, try to maintain a safe and legal following distance. You must allow, at a minimum, one second per 10 feet of vehicle length when traveling under 40 mph. (Add one second for speeds over 40 mph.)
- ✔ When stopping behind another vehicle, you must be able to see, at a minimum, the rear wheels of the vehicle in front of you (safe gap).
- ✔ Be prepared to yield to pedestrians and traffic already at or in the intersection.
- ✔ You must maintain proper spacing when changing lanes or during the expressway merge/exit.
- ✔ When parked during the Stop/Start exercise, do not position the vehicle in an area with limited sight distance (curves, hills, etc.)
- ✔ When parked during the Stop/Start exercise, do not block road signs, driveways, fire hydrants, and other vehicles, etc.

Speed/Throttle Control

- ✔ Always maintain steady and even speed control when accelerating and decelerating. Minimize distrupting traffic by keeping up with traffic flow, but never exceed the regulatory speed limit.
- ✔ Do not drive too fast in or near intersections or during turns and curves.
- ✔ Adjust your speed according to the traffic and weather conditions on your route.

Lane Usage

- ✔ Do not put vehicle over curbs, sidewalks, or lane markings.
- ✔ If required to stop, come to a complete stop behind stop signs, crosswalks, signals, sidewalks, or stop lines.
- ✔ On a multiple lane road, the vehicle should complete the turn in the proper lane. When turning left, the vehicle should complete the turn in the lane directly to the right of the center line. When turning right, the vehicle should complete the turn in the right-most (curb) lane.
- ✔ After completing the turn in the correct lane, the vehicle should move to (or remain in) the right-most lane unless obstructed by tree limbs, utility poles, etc.
- ✔ Be familiar with and verbalize proper lane position for steep grades (Refer to Upgrade/Downgrade procedures in this section).

Signal Usage

- ✔ Always use turn signals properly when turning and changing lanes (not too early or too late).
- ✔ Use 4-way flashers during the Stop/Start, Upgrade/Downgrade and Railroad Crossing maneuvers as required.
- ✔ Use alternately flashing lights on school bus during Student Stop exercise as required.
- ✔ Do not forget to cancel signals.

Obedience to Signs, Signals, and Laws

- ✔ Driver must obey all signs, signals, and laws throughout the entire CDL skills tests. Failure to do so may result in an automatic failure of the CDL skills tests.

Safety Belt Usage

- ✔ From the time the vehicle begins to move, the driver must use a safety belt in a safe and legal manner.

Appendix A: CDL Certification Form

Michigan Department of State

COMMERCIAL DRIVER LICENSE CERTIFICATION

Full Name: (Please Print)	**Date of Birth:**
Driver License Number:	*** Social Security Number:**

*** Disclosure of your Social Security number is required by Section 257.307(1)(b) of the Michigan Vehicle Code (P.A. 300 of 1949). This information will be used for commercial driver identification purposes in accordance with Section 383.153(d) of the Federal Motor Carrier Safety Regulations.**

I am applying for the following Commercial Driver License (CDL):

CDL GROUP DESIGNATOR: (Choose only one.)
You are responsible for knowing the gross vehicle weight rating (GVWR) or the gross combination weight rating (GCWR) of the vehicle(s) you drive.

☐ **GROUP A**
A vehicle towing a vehicle or trailer with a gross vehicle weight rating (GVWR) of 10,001 pounds or more when the gross combination weight rating (GCWR) is 26,001 pounds or more.

☐ **GROUP B**
A vehicle with a GVWR of 26,001 pounds or more.

The Group B allows for towing trailers or other vehicles with a gross vehicle weight rating (GVWR) of 10,000 pounds or less.

☐ **GROUP C**
A single vehicle with a GVWR of 26,000 pounds **or less** or a vehicle with a GVWR of 26,000 pounds **or less** towing a trailer or other vehicle and used to transport (16) or more passengers, including the driver, or to carry hazardous material in amounts requiring a placard.

CDL ENDORSEMENTS: (Choose as many as you need.)

☐ **H - HAZARDOUS MATERIALS** - Needed to carry hazardous materials in amounts requiring a placard.

☐ **N – TANKERS** - Needed to haul liquids or liquefied gases in permanently mounted cargo tanks rated at 119 gallons or more or portable cargo tanks rated at 1,000 gallons or more.

☐ **P - PASSENGER VEHICLES** - Needed to operate any vehicle designed to carry 16 or more people, including the driver.

☐ **T - DOUBLE TRAILERS** - Needed when towing two trailers with a single power unit.

CDL RESTRICTIONS: (Choose only one)

The vehicle I will operate is: ☐ Equipped with air brakes ☐ Not equipped with air brakes **(Restriction Code 28)**

DRIVER CERTIFICATION: Please answer all of the following questions. Your driving record will be verified before you take any tests. A starred (*) response to one or more of these questions will disqualify you from obtaining a CDL.

1.	Do you reside at a permanent Michigan address with the intention of remaining in Michigan?	☐ Yes	☐ No •
2.	Do you have a driver license from more than one state? (Section 257.301 of the Michigan Vehicle Code and 49 CFR Part 383.21 of the Federal Safety Rules prohibit drivers from having more than one driver license.)	☐ Yes	☐ No
3.	Are you currently disqualified or suspended from operating commercial motor vehicles in Michigan or any state?	☐ Yes •	☐ No
4.	Is your driving privilege currently suspended, revoked, denied, or canceled in Michigan or any state?	☐ Yes •	☐ No
5.	Will you be driving a commercial motor vehicle into other states (**interstate operation**)? If yes, please answer question # 5a. If no, go directly to question # 6.	☐ Yes	☐ No
5a.	Do you meet the driver qualification standards as stated in 49 CFR Part 391 of the Federal Safety Rules? *Unless exempt, this includes having a valid Medical Examiner's Certificate (DOT card) or medical waiver.*	☐ Yes	☐ No •
6.	Will you be driving a commercial motor vehicle only within the state of Michigan (**intrastate operation**)?	☐ Yes	☐ No
6a.	Do you meet the driver qualification standards as required by the Michigan Motor Carrier Safety Act (1963 PA 181), Michigan Pupil Transportation Act (1990 PA 187) or the Michigan Motor Bus Transportation Act (1982 PA 432)?	☐ Yes	☐ No •
7.	If required, is the vehicle that you will use for the CDL skills test representative of the vehicle that you will operate, once licensed?	☐ Yes	☐ No

I certify the information disclosed on this form is true. I understand making a false statement when applying for a driver license is a crime.

Signature: X ***Date:***

BFS-103 (10/02) Authority granted under Public Act 300 of 1949, as amended.

Appendix B: Sample Test Questions

1. Which of these is a good thing to remember about using mirrors?
A. You should check your mirrors twice for a lane change.
B. There are “blind spots” that your mirror cannot show you.
C. Convex mirrors make things look larger and closer than they really are.
D. You should look at a mirror for several seconds at a time.

2. You are coupling a tractor and semitrailer and have connected the air lines. Before backing under the trailer you should:
A. Pull ahead to test the glad hand connections.
B. Apply the brakes twice to alert others.
C. Supply air to the trailer system, then pull out the air supply knob to lock the trailer brakes.
D. Make sure that the trailer brakes are off.

3. Which part of the kingpin should the locking jaws close around?
A. It does not matter.
B. The base.
C. The head.
D. The shank.

4. You must be able to see a warning before air pressure in the service air tanks falls below _____ psi.
A. 50.
B. 40.
C. 80.
D. 60.

5. Which of these is not a good thing to do when driving on slippery roads?
A. Make turns as gently as possible.
B. Keep other traffic out of your side space.
C. Use a light touch on the accelerator and brake pedals.
D. Use the engine brake or speed retarder.

6. When there is a hazardous materials emergency, you should:
A. Prevent smoking and keep open flame away.
B. Keep people away.
C. Warn others of the danger.
D. Do all of the above.

7. When you unload the smaller tanks of a tank with bulkheads, be careful to check your:
A. Power usage.
B. Water content.
C. Air to fuel ratio.
D. Weight distribution.

Appendix C: Vehicle Inspection Memory Aid

ALL VEHICLES

Engine Compartment

leaks/hoses/all belts
oil level
coolant level
power steering fluid
water pump/fan
alternator
air compressor

Cab Check/Engine Start

clutch/gearshift
oil pressure gauge
temperature gauge
ammeter/voltmeter
mirrors, windshield
emer equip (f-e-t) (FA-FL)
steering play
wipers/washers
lighting indicators
horn
heater/defroster
park/hydraulic brake ck
air brake ck (loss/warn/TPV-PV)
safety belt

Lights/Reflectors

clearance/strobe
head
tail
turns
4-ways (amb-red-arm)
brakes
reflectors

SCHOOL BUS/TRUCK/TRACTOR

Steering
steering box/hoses
steering linkage

Front Suspension
springs/air
mounts
shock

Front Brake
slack adjustor
chamber
hose/line
disc/drum/linings

Front Wheel
rim
tire
hub oil seal
lug nuts

Side of Vehicle
door, mirror, stop arm
fuel tank
battery/box
drive shaft
exhaust system
frame

School/Other Bus
passenger entry/lifts
emergency exits
seating

***Rear Suspension**
spring/air/torque
mounts
shocks

***Rear Brakes**
slack adjustors
chambers
hoses/lines
discs/drums/linings

***Rear Wheels**
rims
tires
axle seals
lug nuts
spacers

Rear of Vehicle
splash guards
doors, ties, lift

Tractor/Coupling Area
air/electric lines
catwalk

Coupling
mounting bolts
locking jaws
kingpin/apron/gap
platform
release arm
sliding 5th wheel
(locking pins)

TRAILER

Trailer Front
air/electric connections
header board

Side of Trailer
landing gear
doors, ties, lift
frame
tandem release arm
(locking pins)

***Wheels**
rims
tires
axle seals
lug nuts
spacers

***Suspension**
springs/air/torque
mounts
shocks

***Brakes**
slack adjustors
chambers
hoses/lines
discs/drums/linings

Rear of Trailer
doors, ties, lift
splash guards

COACH/TRANSIT BUS

Passenger Items
passenger entry/lifts
emergency exits
seating

Entry/Exit
doors/mirrors

Front Suspension
level/air leaks

Front Wheel
rim
tire
hub oil seal
lug nuts

Side of Vehicle
fuel tank
compartments
battery/box

***Rear Wheels**
rims
tires
axle seals
lug nuts
spacers

***Rear Suspension**
level/air leaks

***If there is more than one axle, you must inspect each one.**